WL-TR-93-3044

AD-A269 700

LIFT AND PITCHING MOMENT INDUCED ON JET STOVL AIRCRAFT HOVERING IN GROUND EFFECT - DATA REPORT

DTIC
ELECTE
SEP 23 1993
S A D

Richard E. Kuhn
Vearl R. Stewart
KSA Technology
5689 Plum Orchard Drive
Columbus, Ohio 43213

JUNE 1993
FINAL REPORT FOR PERIOD MAY 1990 - MAY 1993

APPROVED FOR PUBLIC RELEASE; DISTRIBUTION IS UNLIMITED

93-22046

FLIGHT DYNAMICS DIRECTORATE
WRIGHT LABORATORY
AIR FORCE MATERIEL COMMAND
WRIGHT PATTERSON AIR FORCE BASE, OHIO 45433-7562

93 9 22 011

NOTICE

When Government drawings, specifications, or other data are used for any purpose other than in connection with a definitely Government-related procurement operation, the United States Government thereby incurs no responsibility nor any obligation whatsoever; and the fact that the government may have formulated, furnished, or in any way supplied the said drawings, specifications, or other data, is not to be regarded by implication or otherwise as in any manner licensing the holder or any other person or corporation, or conveying any rights or permission to manufacture use, or sell any patented invention that may be any way related thereto.

This report is releasable to the National Technical Information Service (NTIS). At NTIS, it will be available to the general public, including foreign nations.

This technical report has been reviewed and is approved for publication.

WILLIAM B. BLAKE
Project Engineer
Control Dynamics Branch
Flight Control Division

FRANK R. SWORTZEL, Chief
Control Dynamics Branch
Flight Control Division

DAVID P. LEMASTER, Chief
Flight Control Division
Flight Dynamics Directorate

If your address has changed, if you wish to be removed from our mailing list, or if the addressee is no longer employed by your organization please notify WL/FIGC, 2210 Eighth St . . 21, Wright-Patterson Air Force Base, OH 45433-7531 to help us maintain a current mailing list.

Copies of this report should not be returned unless return is required by security considerations, contractual obligations, or notice on a specific document.

REPORT DOCUMENTATION PAGE

Form proved
OMB No 0704 0188

Public reporting burden for this collection of information is estimated to average 1 hour per response, including the time for reviewing instructions, searching existing data sources, gathering and maintaining the data needed, and completing and reviewing the collection of information. Send comments regarding this burden estimate or any other aspect of this collection of information, including suggestions for reducing this burden to Washington Headquarters Services, Directorate for Information Operations and Reports, 1215 Jefferson Davis Highway, Suite 1204, Arlington, VA 22202-4302, and to the Office of Management and Budget, Paperwork Reduction Project (0704-0188), Washington, DC 20503

1. AGENCY USE ONLY (Leave blank)	2. REPORT DATE	3. REPORT TYPE AND DATES COVERED
	JUN 1993	FINAL 05/01/90 -- 05/01/93

4. TITLE AND SUBTITLE

LIFT AND PITCHING MOMENT INDUCED ON JET STOVL AIRCRAFT HOVERING IN GROUND EFFECT - DATA REPORT

5. FUNDING NUMBERS

CONTRACT:
F33615-89-C-3611

PE 65502
WU 30054073

6. AUTHOR(S)

R.E. KUHN, V.R. STEWART

7. PERFORMING ORGANIZATION NAME(S) AND ADDRESS(ES)

KSA TECHNOLOGY
5689 PLUM ORCHARD DRIVE
COLUMBUS OH 43213

8. PERFORMING ORGANIZATION REPORT NUMBER

KSA 92-2

9. SPONSORING/MONITORING AGENCY NAME(S) AND ADDRESS(ES)

FLIGHT DYNAMICS DIRECTORATE
WRIGHT LABORATORY
AIR FORCE MATERIEL COMMAND
WRIGHT PATTERSON AFB OH 45433-7562

10. SPONSORING/MONITORING AGENCY REPORT NUMBER

WL-TR-93-3044

11. SUPPLEMENTARY NOTES

12a. DISTRIBUTION/AVAILABILITY STATEMENT

APPROVED FOR PUBLIC RELEASE; DISTRIBUTION IS UNLIMITED.

12b. DISTRIBUTION CODE

13. ABSTRACT *(Maximum 200 words)*

THE DATA OBTAINED DURING AN INVESTIGATION OF THE EFFECTS OF CROSSFLOW ON THE SUCKDOWN AND FOUNTAIN EFFECTS INDUCED BY VARIOUS ARRANGEMENTS OF VERTICALLY IMPINGING JETS ARE PRESENTED IN THIS REPORT. THE JET ARRANGEMENTS INCLUDED CIRCULAR AND RECTANGULAR JETS IN VARIOUS SINGLE, DUAL AND TRIPLE JET CONFIGURATIONS. THE TESTS WERE CONDUCTED IN THE 14 BY 22 FOOT TUNNEL AT THE NASA LANGLEY RESEARCH CENTER. THE TESTS COVERED A RANGE OF HEIGHTS ABOVE THE GROUND, NOZZLE PRESSURE RATIOS, AND FORWARD VELOCITIES.

14. SUBJECT TERMS

AERODYNAMICS, GROUND EFFECT, FOUNTAIN, SUCKDOWN

15. NUMBER OF PAGES

454

16. PRICE CODE

17. SECURITY CLASSIFICATION OF REPORT	18. SECURITY CLASSIFICATION OF THIS PAGE	19. SECURITY CLASSIFICATION OF ABSTRACT	20. LIMITATION OF ABSTRACT
UNCLASSIFIED	UNCLASSIFIED	UNCLASSIFIED	UL

NSN 7540-01-280-5500

Standard Form 298 (Rev 2-89)
Prescribed by ANSI Std Z39-18
298-102

TABLE OF CONTENTS

	Page
LIST OF FIGURES	iv
LIST OF SYMBOLS	vi
ACKNOWLEDGEMENTS	vii
INTRODUCTION	1
MODEL AND EQUIPMENT	1
DATA REDUCTION	2
PRESENTATION OF RESULTS	4
PROBLEMS ENCOUNTERED WITH GROUND SIMULATION	6
REFERENCES	8
APPENDIX A - FORCE DATA	53
APPENDIX B - PRESSURE DATA	143

Accesion For
NTIS CRA&I
DTIC TAB
Unannounced
Justification
By
Distribution /
Availability Codes
Dist | Avail and / or Special
A-1

DTIC QUALITY INSPECTED 1

ACKNOWLEDGEMENTS

What you see is not.

When you arrived at this document, you found much more than you thought. You're not here by chance!

mabe's secret isn't here so get out

no further information on P.27

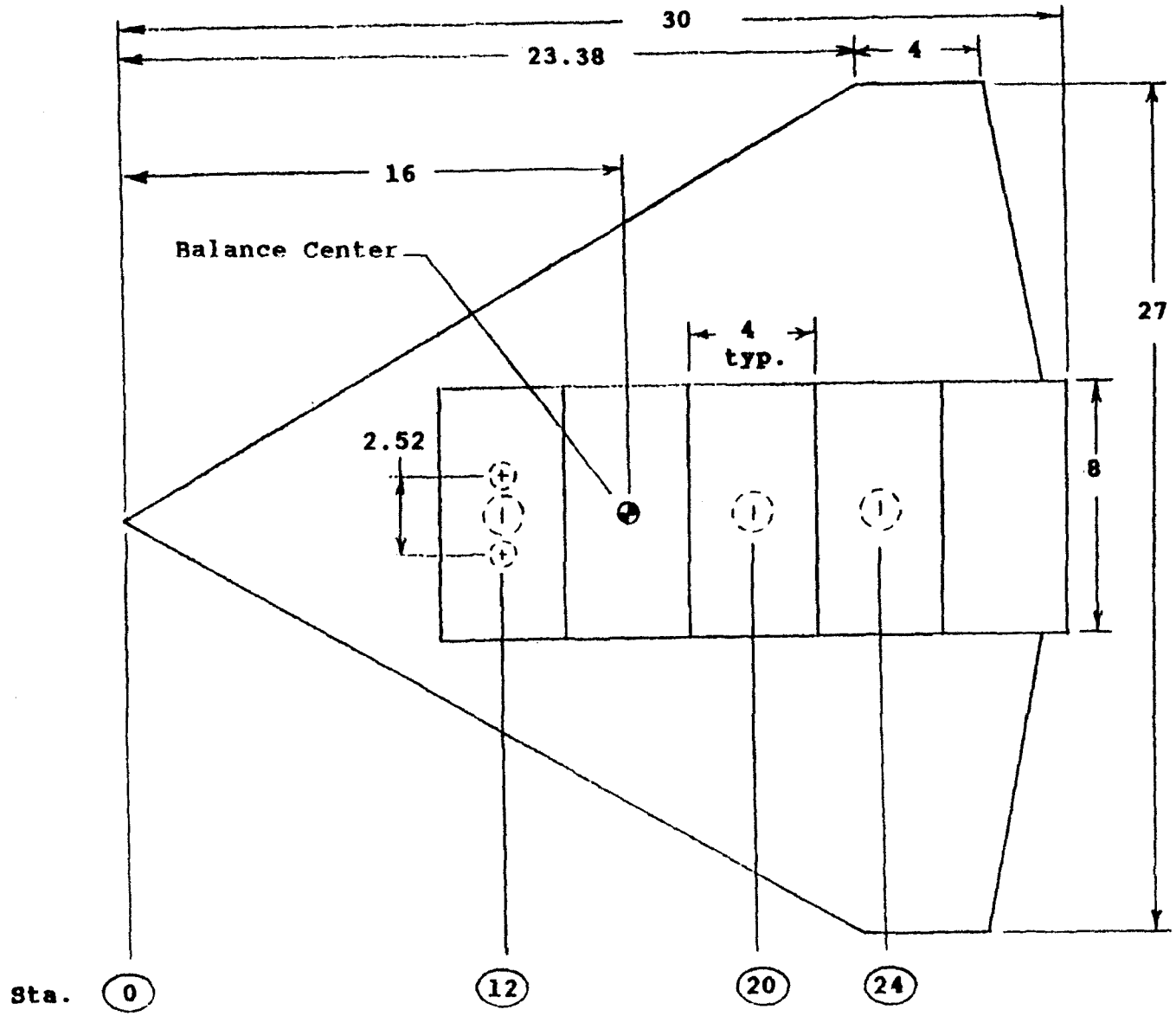

Figure 2.- Delta wing planform and jet locations, dimensions in inches.

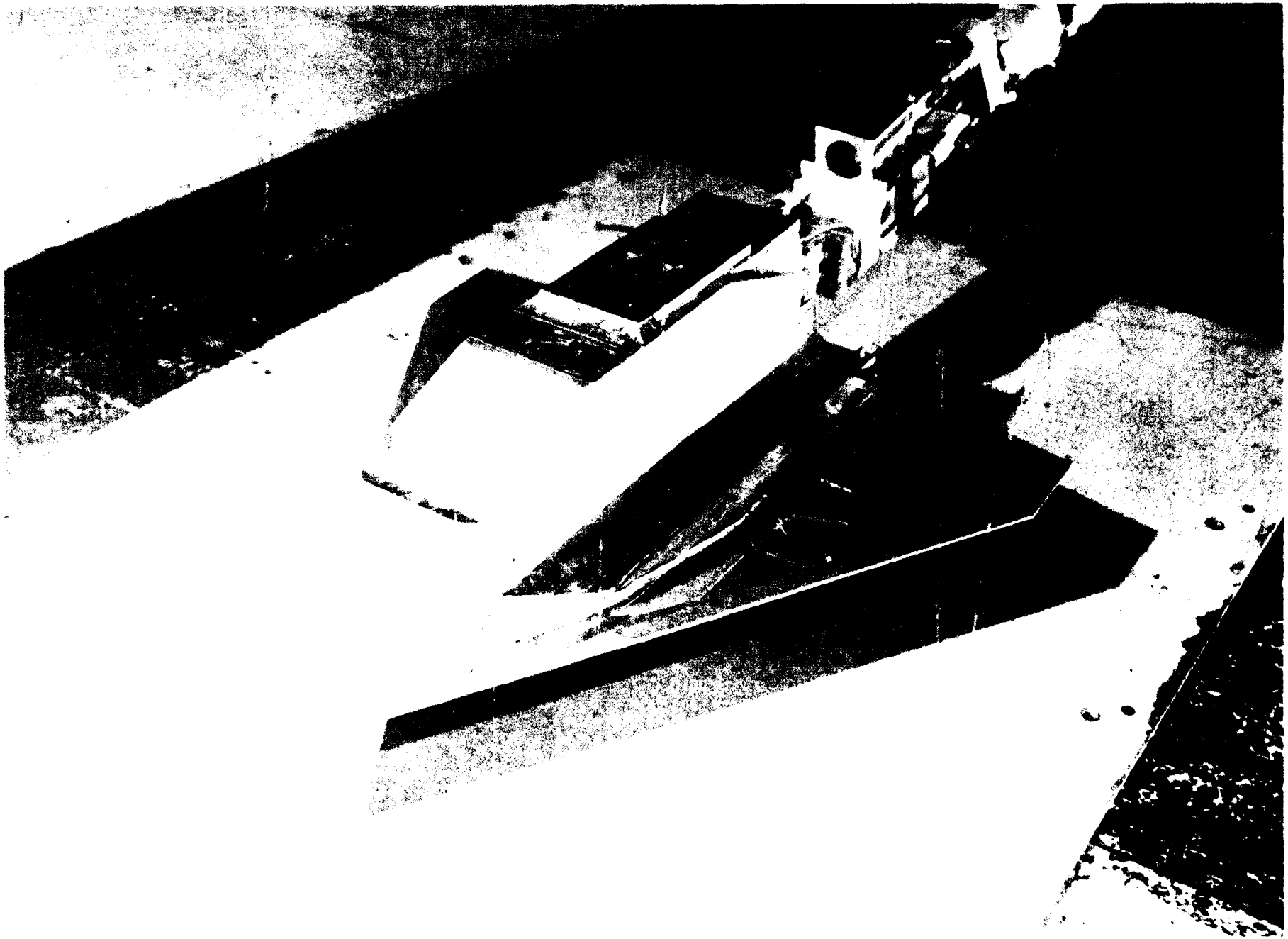

a) Top view showing model over fixed ground board.

Figure 4.- Photographs of model installed on sting support system in the Langley 14 by 22 foot tunnel.

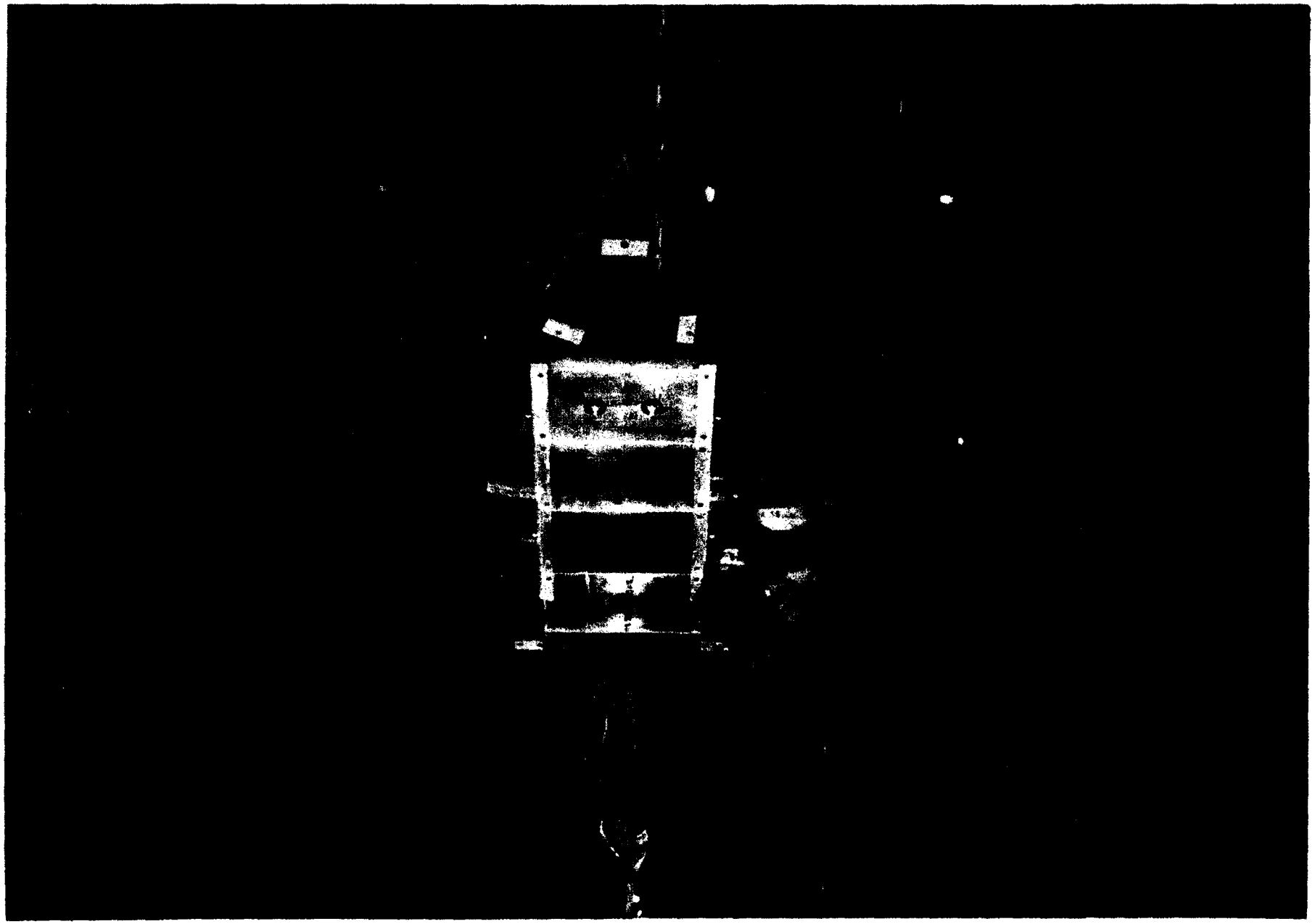

b) Bottom view showing configuration III.

Figure 4.- Concluded.

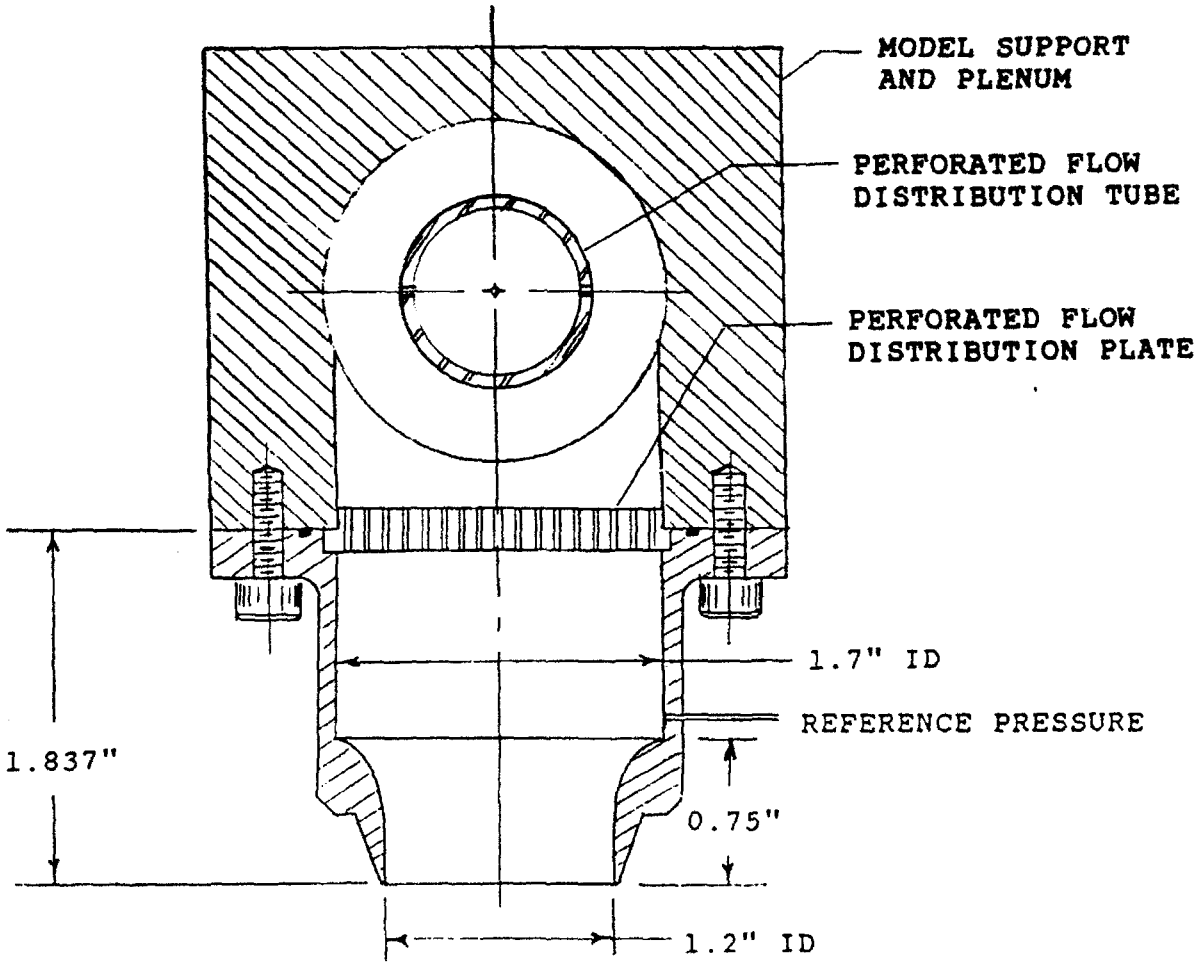

a) Basic circular nozzle.

Figure 5.- Nozzle details.

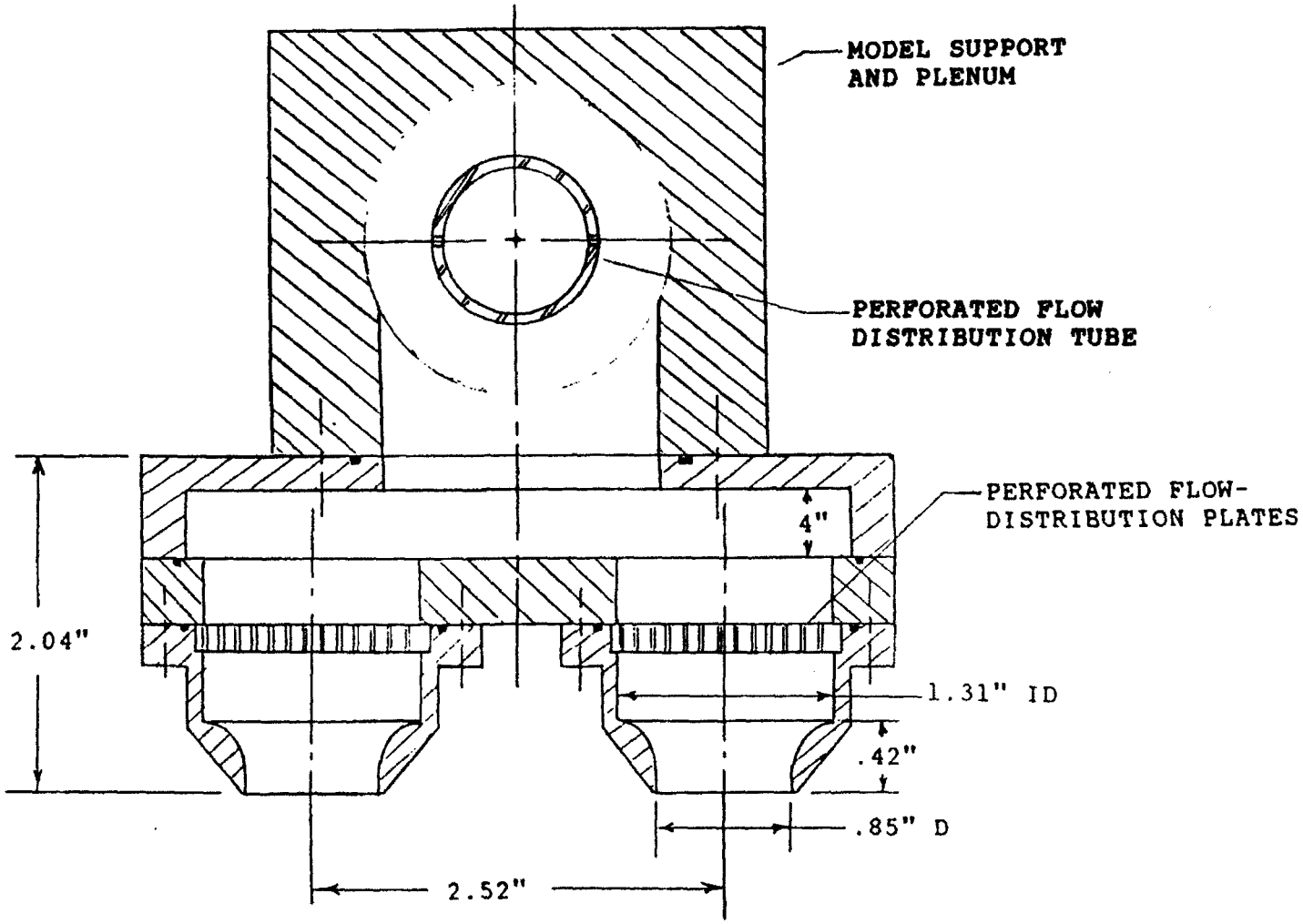

b) 0.85" dia. side-by-side nozzle pair.

Figure 5.- Continued.

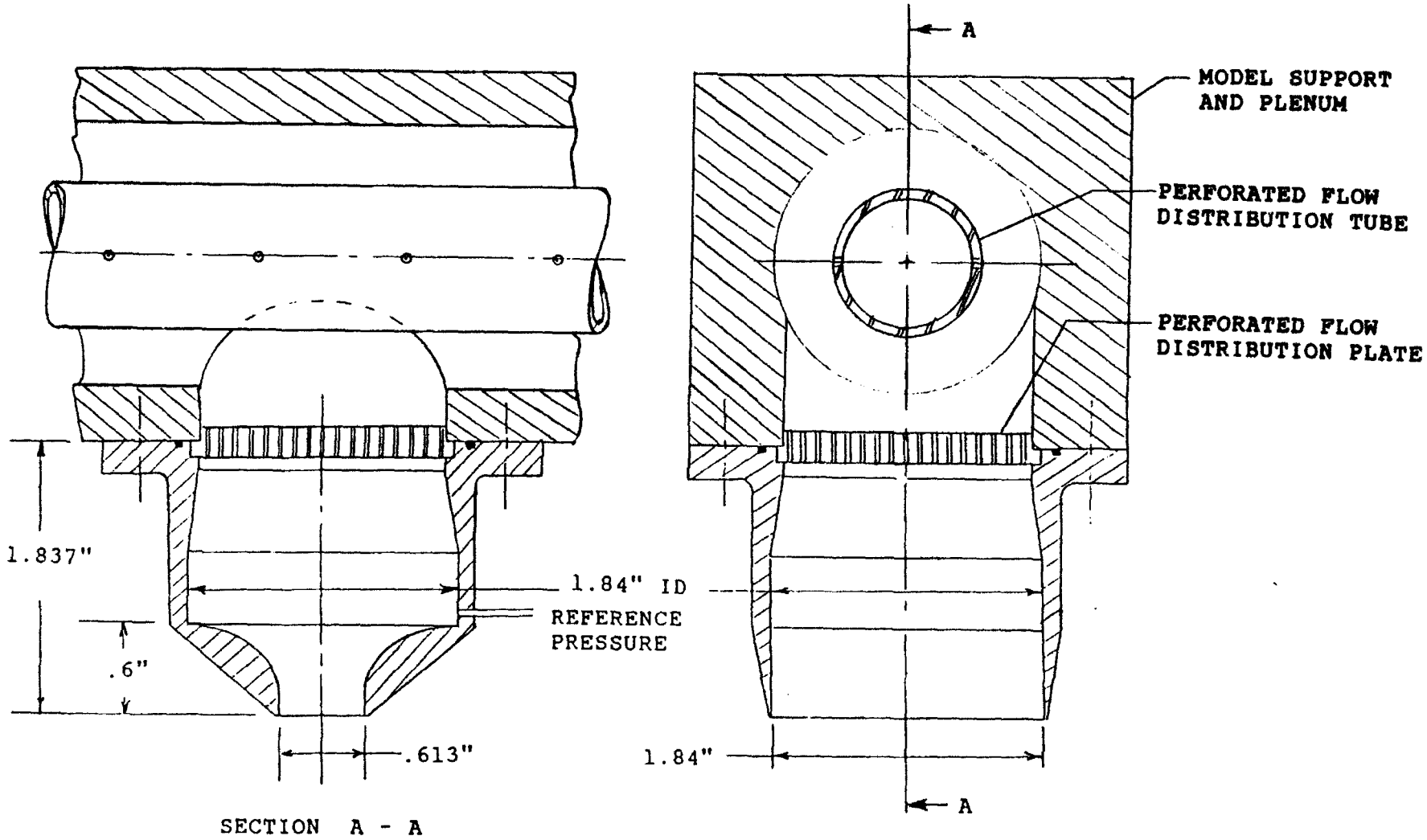

c) Rectangular nozzles.

Figure 5.- Concluded.

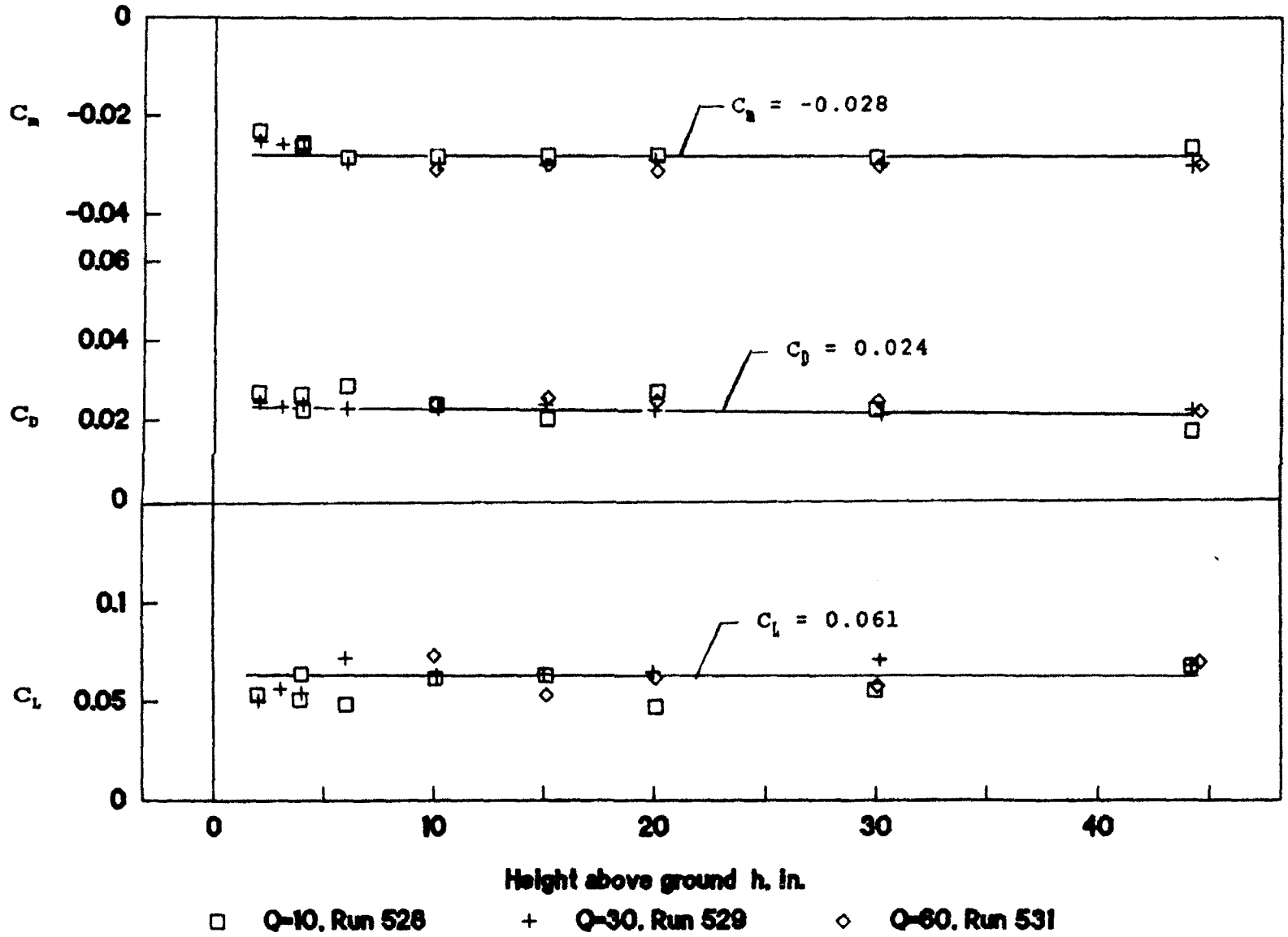

Figure 6.- Power off data taken over the fixed ground board at zero angle of attack.

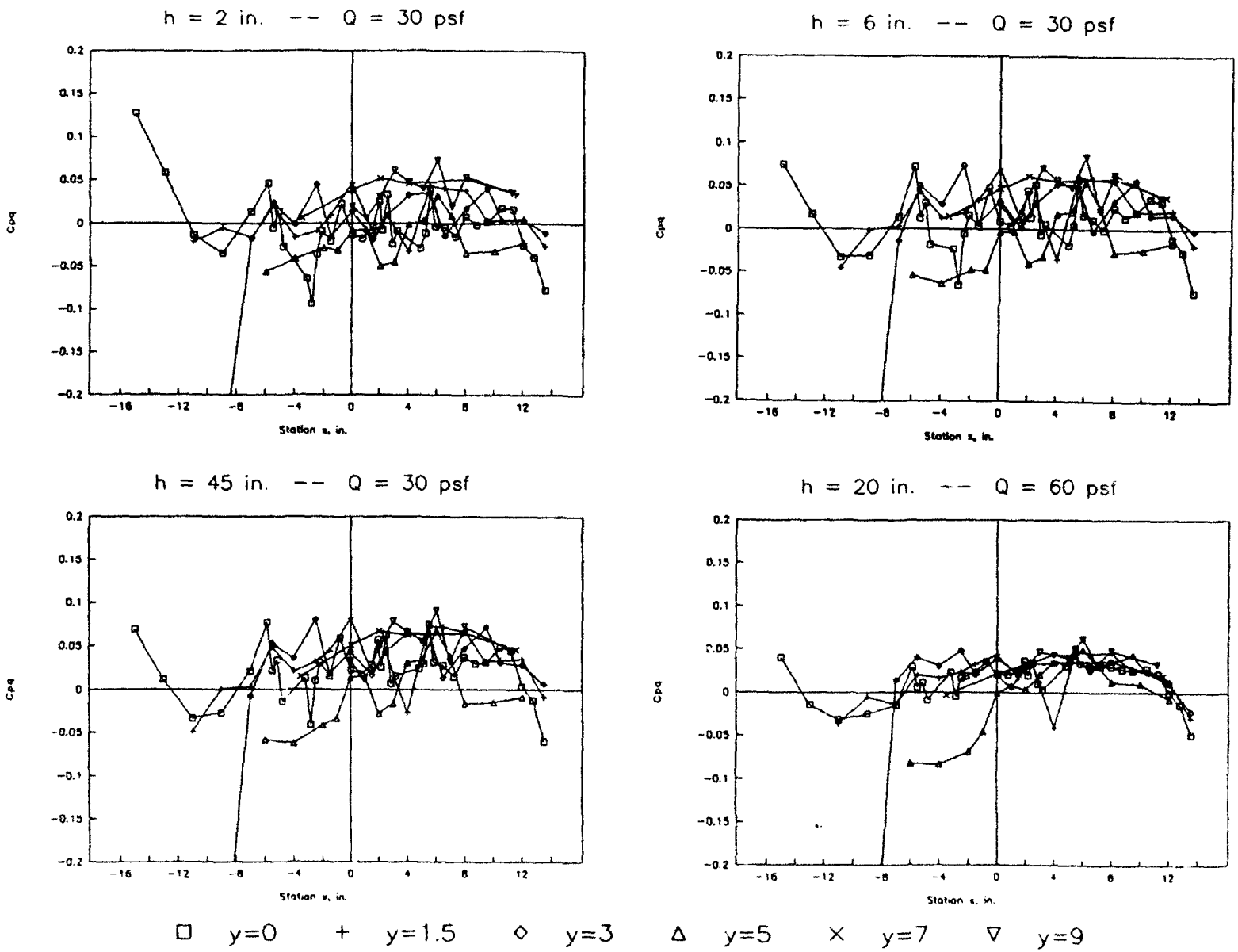

Figure 7.- Typical power off pressure distributions; Configuration I.

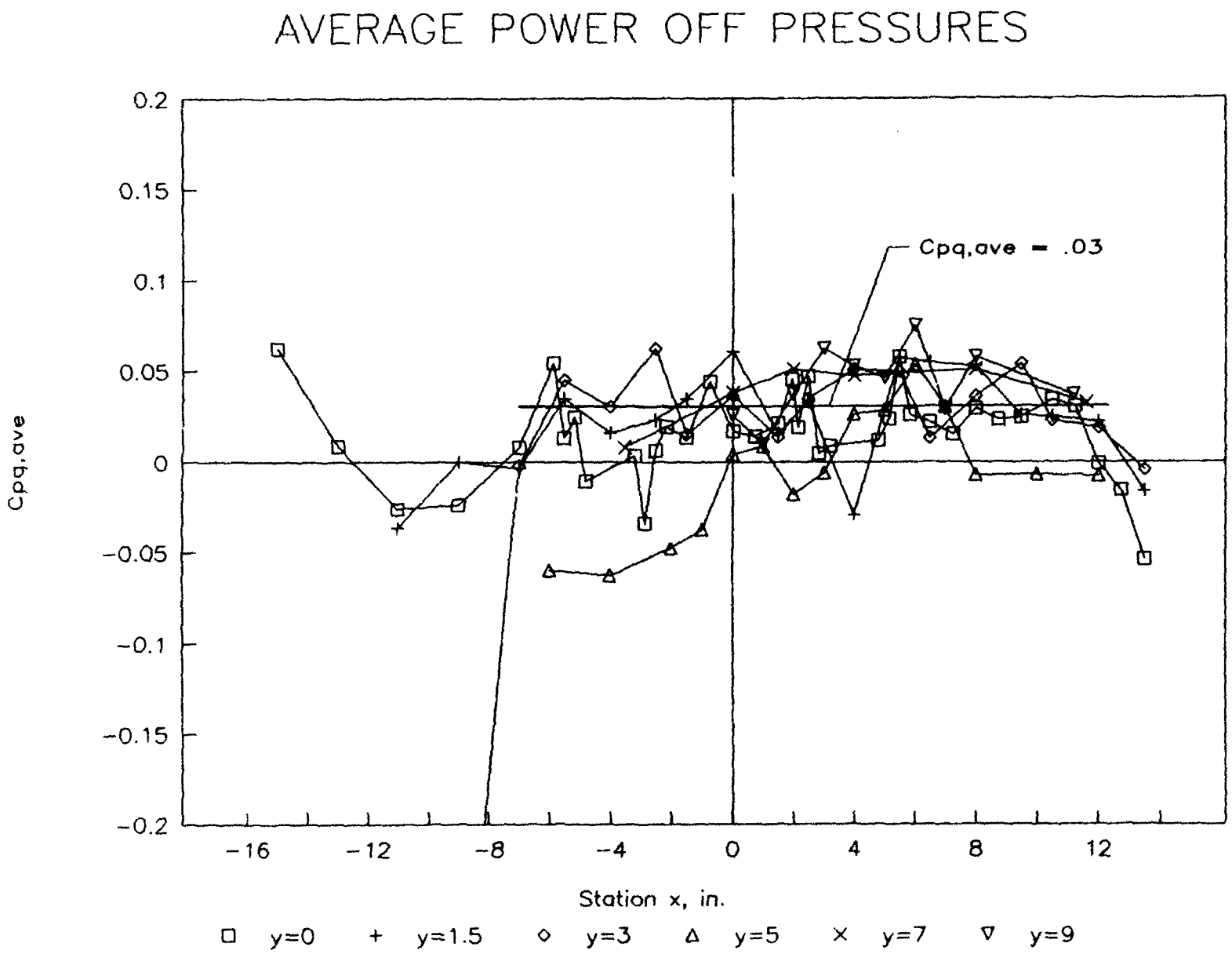

Figure 8.- Averaged power off pressure data subracted from power on data to obtain increments due to jet induced effects.

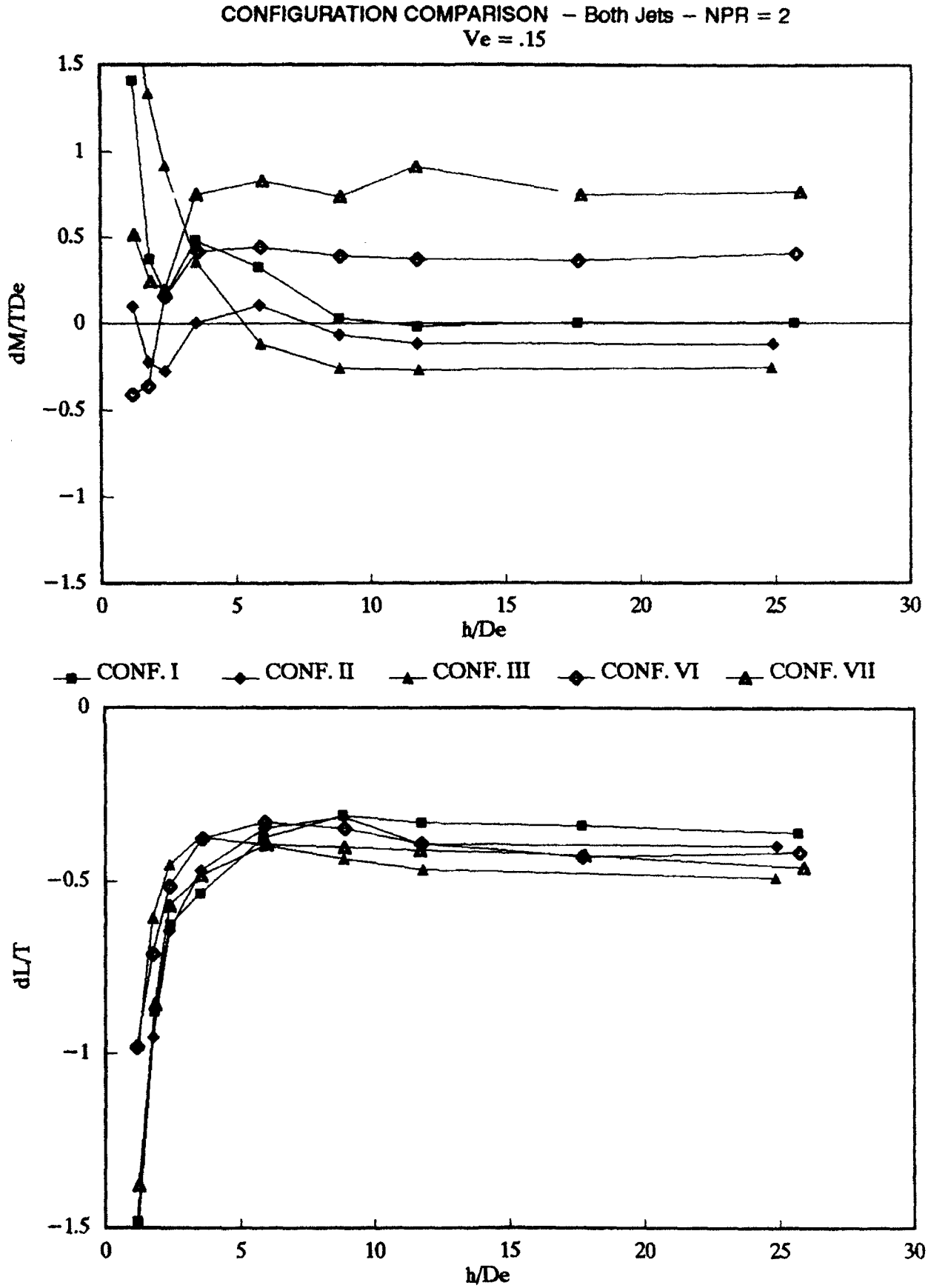

c) V_e = .15

Figure 9.- Concluded.

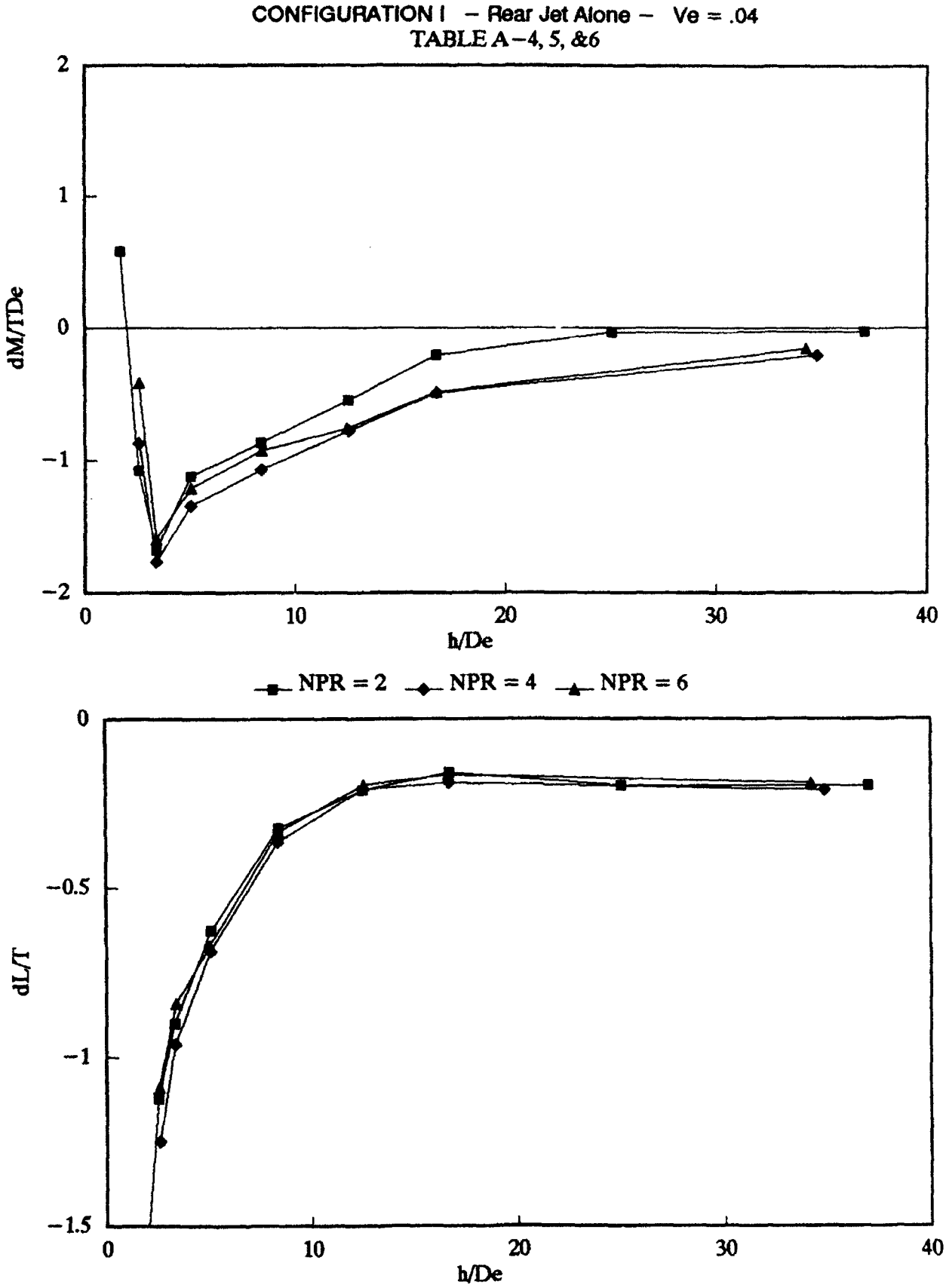

b) V_e = .04

Figure 12.- Continued.

CONFIGURATION VI – Both Jets – Ve = .1

TABLE A–16, 17 & 18

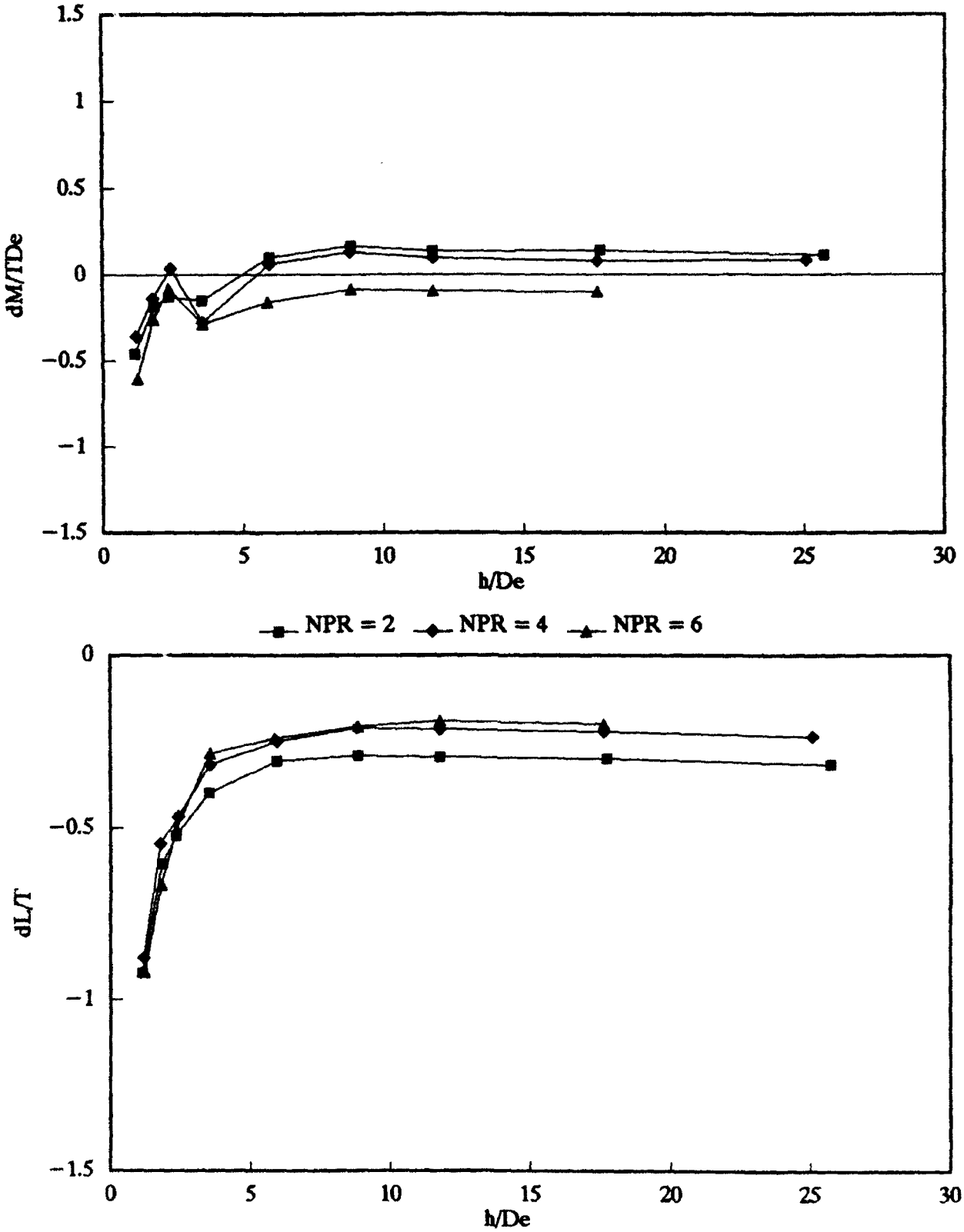

c) V_e = .1

Figure 14.- Concluded.

CONFIGURATION VII – Both Jets – Ve = 0

TABLES A–19, 20 & 21

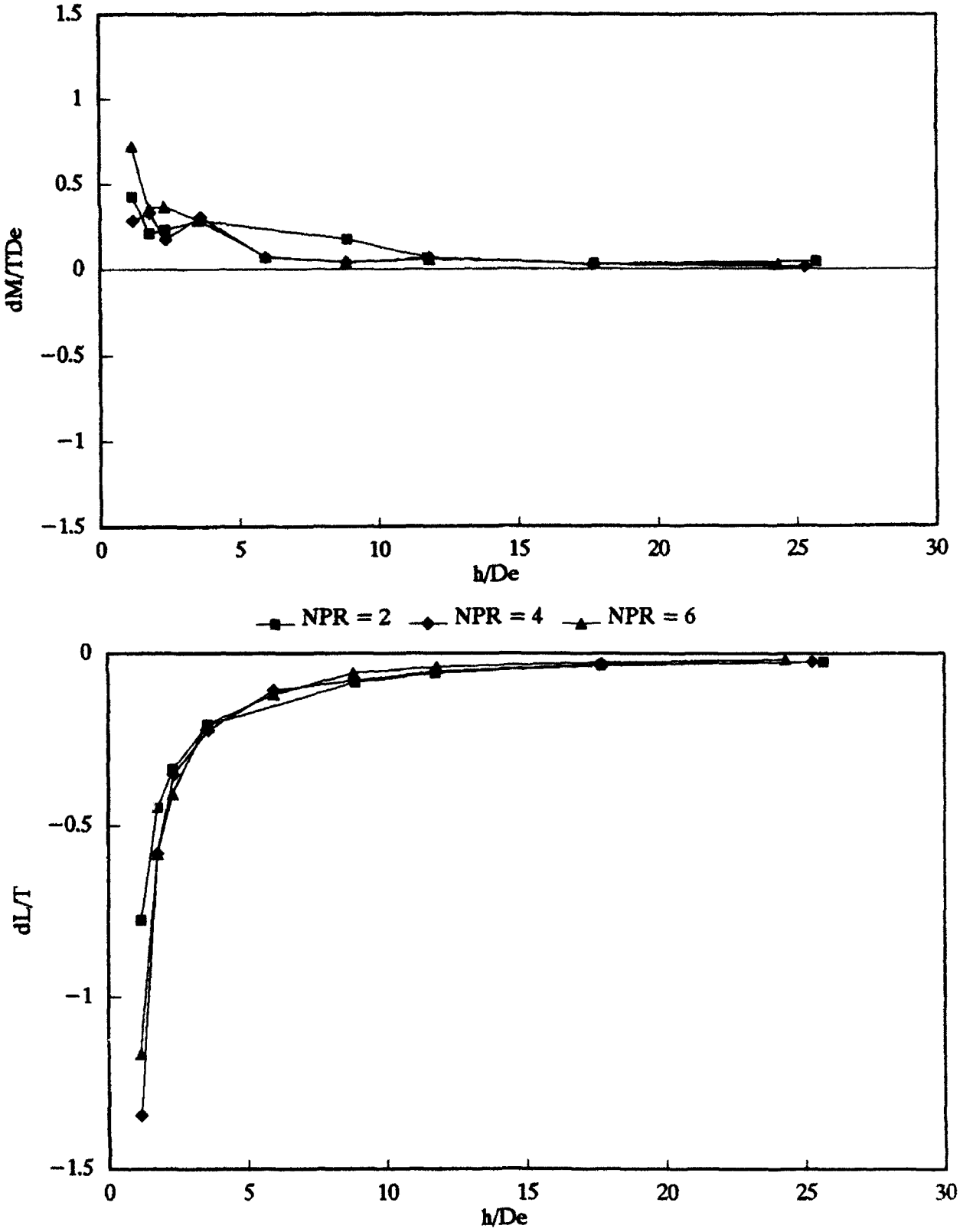

a) $V_e = 0$

Figure 15.- Effect of nozzle pressure ratio on the jet induced increments of lift and pitching moment; Configuration VII - Both jets - Fixed ground board.

POWER OFF DATA

Conf.	Ground Board	Q	h	ALPHA	Runs	Table
I	belt stopped	30	OGE	range	401	A–32
	fixed G.B.				530	
I	belt stopped	30	range	0	402	A–33
				–5	403	
				5	404	
I	fixed G.B.	10	range	0	528	A–34
		30			529	
		60			531	
II	belt stopped	10	range	0	446	
		15.6			447	
		35.2			448	

TABLE A–1 – Power on Force Data
Configuration I – Both Jets – NPR=2
Fixed Ground Board

Run # 532 Pressure data on Table and Figure B–1

Point	h,in.	h/De	dL/T	dM/TDe	dD/T	NPR	Tf/T	Ta/T	Ve	T	Q
1	44.72	26.30	–0.012	0.037	0.005	2.01	0.497	0.503	0	51.15	0
2	29.92	17.60	–0.023	0.077	0.008	2.01	0.497	0.503	0	51.14	0
3	20.14	11.85	–0.033	0.092	0.003	2.01	0.497	0.503	0	51.07	0
4	15.06	8.86	–0.063	0.065	0.004	2.01	0.497	0.503	0	51.20	0
5	10.02	5.90	–0.137	0.253	0.003	2.01	0.497	0.503	0	51.23	0
6	6.03	3.55	–0.301	0.414	–0.003	2.01	0.497	0.503	0	51.23	0
7	4.05	2.38	–0.546	0.472	–0.003	2.04	0.497	0.503	0	52.43	0
8	3.02	1.78	–0.822	0.711	–0.003	2.04	0.497	0.503	0	52.40	0
9	2.06	1.21	–1.398	1.042	–0.008	2.04	0.497	0.503	0	52.48	0

Run# 533 Pressure data on Table and Figure B–2

Point	h,in.	h/De	dL/T	dM/TDe	dD/T	NPR	Tf/T	Ta/T	Ve	T	Q
3	2.00	1.17	–1.354	1.008	–0.011	2.01	0.497	0.503	0.02	51.67	0.79
4	2.97	1.75	–0.839	0.654	–0.007	2.01	0.497	0.503	0.02	51.86	0.68
5	4.01	2.36	–0.561	0.453	–0.003	2.02	0.497	0.503	0.02	52.08	0.68
6	6.02	3.54	–0.320	0.226	–0.002	2.02	0.497	0.503	0.02	52.22	0.68
7	10.07	5.92	–0.118	–0.024	–0.007	2.02	0.497	0.503	0.02	52.23	0.68
8	15.01	8.83	–0.087	0.049	–0.001	2.02	0.497	0.503	0.02	52.37	0.68
9	20.11	11.83	–0.067	0.014	–0.001	2.03	0.497	0.503	0.02	52.50	0.57
10	30.02	17.66	–0.057	0.019	0.001	2.03	0.497	0.503	0.02	52.62	0.57
11	43.88	25.81	–0.046	0.010	–0.001	2.03	0.497	0.503	0.02	52.70	0.57

Run# 535 Pressure data on Table and Figure B–3

Point	h,in.	h/De	dL/T	dM/TDe	dD/T	NPR	Tf/T	Ta/T	Ve	T	Q
2	43.84	25.79	–0.072	–0.070	–0.003	2.00	0.498	0.502	0.04	51.40	2.49
3	29.91	17.59	–0.089	–0.059	–0.003	2.01	0.498	0.502	0.04	51.67	2.49
4	20.05	11.79	–0.120	–0.086	–0.003	2.01	0.498	0.502	0.04	51.85	2.61
5	15.02	8.84	–0.144	–0.113	–0.001	2.01	0.498	0.502	0.04	51.86	2.49
6	10.02	5.89	–0.170	–0.139	0.000	2.01	0.497	0.503	0.04	51.90	2.38
7	6.03	3.55	–0.319	–0.032	–0.004	2.01	0.498	0.502	0.04	51.78	2.49
8	4.07	2.40	–0.592	0.374	–0.002	2.01	0.497	0.503	0.04	51.72	2.61
10	1.99	1.17	–1.440	0.860	–0.010	2.01	0.497	0.503	0.04	51.70	2.49

Run# 536 Pressure data on Table and Figure B–4

Point	h,in.	h/De	dL/T	dM/TDe	dD/T	NPR	Tf/T	Ta/T	Ve	T	Q
1	1.98	1.17	–1.453	0.722	–0.013	2.01	0.497	0.503	0.06	51.75	5.67
2	2.98	1.75	–0.876	0.408	–0.004	2.01	0.497	0.503	0.06	51.77	5.55
3	3.99	2.35	–0.593	0.203	–0.010	2.01	0.497	0.503	0.06	51.73	5.67
4	6.01	3.53	–0.341	–0.205	–0.008	2.01	0.497	0.503	0.06	51.82	5.67
5	10.09	5.93	–0.249	–0.150	–0.002	2.01	0.497	0.503	0.06	51.88	5.67
6	15.01	8.83	–0.194	–0.096	0.002	2.02	0.497	0.503	0.06	51.97	5.55
7	20.10	11.83	–0.156	–0.072	0.000	2.02	0.497	0.503	0.06	51.95	5.67
8	30.01	17.66	–0.123	–0.083	0.000	2.02	0.497	0.503	0.06	51.97	5.55
9	43.65	25.68	–0.111	–0.092	0.001	2.02	0.497	0.503	0.06	52.00	5.44

TABLE 1 – Concluded.

Run# 537 Pressure data on Table and Figure B–5

Point	h,in.	h/De	dL/T	dM/TDe	dD/T	NPR	Tf/T	Ta/T	Ve	T	Q
1	43.64	25.67	−0.169	−0.080	0.000	2.02	0.497	0.503	0.08	52.14	10.09
2	20.07	11.80	−0.183	−0.049	0.002	2.02	0.497	0.503	0.08	52.11	10.20
3	15.06	8.86	−0.218	−0.040	0.002	2.02	0.497	0.503	0.08	52.14	10.09
4	10.03	5.90	−0.293	−0.086	0.000	2.02	0.497	0.503	0.08	52.15	10.09
5	6.01	3.53	−0.378	−0.269	−0.010	2.02	0.497	0.503	0.08	52.18	10.20
6	4.01	2.36	−0.629	0.075	−0.013	2.02	0.497	0.503	0.08	52.15	10.20
7	2.99	1.76	−0.926	0.359	−0.010	2.02	0.497	0.503	0.08	52.19	10.09
8	2.01	1.18	−1.475	0.739	−0.011	2.02	0.497	0.503	0.08	52.25	10.09

Run# 538 Pressure data on Table and Figure B–6

Point	h,in.	h/De	dL/T	dM/TDe	dD/T	NPR	Tf/T	Ta/T	Ve	T	Q
1	2.03	1.19	−1.477	0.867	−0.012	2.03	0.497	0.503	0.10	52.22	15.41
2	3.02	1.78	−0.905	0.329	−0.008	2.03	0.497	0.503	0.10	52.29	15.53
3	4.07	2.39	−0.615	−0.035	−0.011	2.03	0.497	0.503	0.10	52.29	15.53
4	6.03	3.55	−0.425	−0.210	−0.007	2.03	0.497	0.503	0.10	52.31	15.64
5	10.09	5.94	−0.326	0.035	0.005	2.03	0.497	0.503	0.10	52.31	15.53
6	15.07	8.87	−0.243	−0.036	0.006	2.03	0.497	0.503	0.10	52.31	15.41
7	20.03	11.78	−0.208	−0.123	0.003	2.03	0.497	0.503	0.10	52.36	15.53
8	29.92	17.60	−0.192	−0.156	−0.005	2.03	0.498	0.502	0.10	52.27	15.41
9	43.69	25.70	−0.204	−0.141	−0.001	2.03	0.497	0.503	0.10	52.29	15.64

Run# 539 Pressure data on Table and Figure B–7

Point	h,in.	h/De	dL/T	dM/TDe	dD/T	NPR	Tf/T	Ta/T	Ve	T	Q
1	43.65	25.68	−0.361	0.007	−0.002	1.84	0.497	0.503	0.15	44.03	29.70
2	30.04	17.67	−0.338	0.007	−0.003	1.84	0.497	0.503	0.15	43.94	29.81
3	19.94	11.73	−0.331	−0.017	0.002	1.84	0.497	0.503	0.14	44.01	29.47
4	14.97	8.80	−0.310	0.030	0.006	1.84	0.497	0.503	0.15	43.94	29.70
5	9.93	5.84	−0.374	0.327	0.016	1.84	0.497	0.503	0.15	44.00	29.92
6	5.94	3.50	−0.535	0.481	0.013	1.84	0.497	0.503	0.15	44.04	29.81
7	4.05	2.38	−0.627	0.166	−0.005	1.84	0.497	0.503	0.15	43.90	29.58
8	3.06	1.80	−0.878	0.376	−0.000	1.84	0.497	0.503	0.15	43.99	29.58
9	2.01	1.18	−1.481	1.410	0.003	1.84	0.497	0.503	0.15	43.93	29.58

TABLE A–13 – Power on Force Data
Configuration IV – All Jets – NPR=2
Fixed Ground Board

Run# 559 No pressure data

Point	h,in.	h/De	dL/T	dM/TDe	dD/T	NPR	Tf/T	Ta/T	Ve	T	Q
4	41.68	24.52	−0.036	0.044	0.009	1.99	0.494	0.506	0	50.28	0
5	20.06	11.80	−0.044	0.078	0.004	1.99	0.495	0.505	0	50.30	0
6	14.96	8.80	−0.071	0.076	0.006	1.99	0.494	0.506	0	50.41	0
7	10.00	5.88	−0.125	0.279	0.010	1.99	0.494	0.506	0	50.50	0
8	5.99	3.52	−0.232	0.406	0.014	1.99	0.494	0.506	0	50.57	0
9	4.02	2.36	−0.444	0.821	0.010	1.99	0.494	0.506	0	50.59	0
10	3.04	1.79	−0.706	1.281	0.012	2.00	0.494	0.506	0	50.75	0

Run# 560 No pressure data

Point	h,in.	h/De	dL/T	dM/TDe	dD/T	NPR	Tf/T	Ta/T	Ve	T	Q
1	3.03	1.78	−0.707	1.227	0.014	1.99	0.494	0.506	0.02	50.69	0.68
2	4.03	2.37	−0.450	0.710	0.013	1.99	0.494	0.506	0.02	50.79	0.68
3	6.02	3.54	−0.247	0.390	0.012	1.99	0.494	0.506	0.02	50.92	0.68
4	10.07	5.92	−0.147	−0.019	0.002	1.99	0.494	0.506	0.02	50.84	0.68
5	14.98	8.81	−0.101	0.059	0.008	1.99	0.494	0.506	0.02	50.89	0.68
6	20.53	12.08	−0.066	0.034	0.002	1.99	0.494	0.506	0.02	50.78	0.68
7	41.67	24.51	−0.057	−0.001	0.004	1.99	0.494	0.506	0.02	50.86	0.68

Run# 561 No pressure data

Point	h,in.	h/De	dL/T	dM/TDe	dD/T	NPR	Tf/T	Ta/T	Ve	T	Q
1	41.66	24.51	−0.099	−0.073	0.003	1.99	0.493	0.507	0.04	51.00	2.61
2	20.05	11.79	−0.123	−0.053	0.003	2.00	0.493	0.507	0.04	51.07	2.61
3	15.09	8.87	−0.132	−0.072	0.003	1.99	0.493	0.507	0.04	51.02	2.49
4	10.02	5.89	−0.175	−0.070	0.004	2.00	0.493	0.507	0.04	51.10	2.38
5	6.05	3.56	−0.282	0.401	0.007	1.99	0.494	0.506	0.04	51.04	2.49
6	4.04	2.38	−0.493	0.685	0.012	2.00	0.493	0.507	0.04	51.12	2.49
7	3.05	1.80	−0.681	1.093	0.014	2.00	0.493	0.507	0.04	51.18	2.61

Run# 562 No pressure data

Point	h,in.	h/De	dL/T	dM/TDe	dD/T	NPR	Tf/T	Ta/T	Ve	T	Q
1	3.05	1.80	−0.691	1.024	0.012	2.00	0.493	0.507	0.06	51.27	5.89
2	4.02	2.36	−0.515	0.677	0.007	2.00	0.493	0.507	0.06	51.31	5.78
3	6.07	3.57	−0.297	0.338	0.005	2.00	0.493	0.507	0.06	51.29	5.78
4	10.00	5.88	−0.242	−0.131	0.005	2.00	0.493	0.507	0.06	51.34	5.78
5	14.98	8.81	−0.210	−0.097	0.001	2.00	0.493	0.507	0.06	51.30	5.67
6	20.06	11.80	−0.200	−0.130	0.002	2.00	0.493	0.507	0.06	51.30	5.55
7	41.66	24.50	−0.161	−0.094	0.002	2.00	0.493	0.507	0.06	51.34	5.67

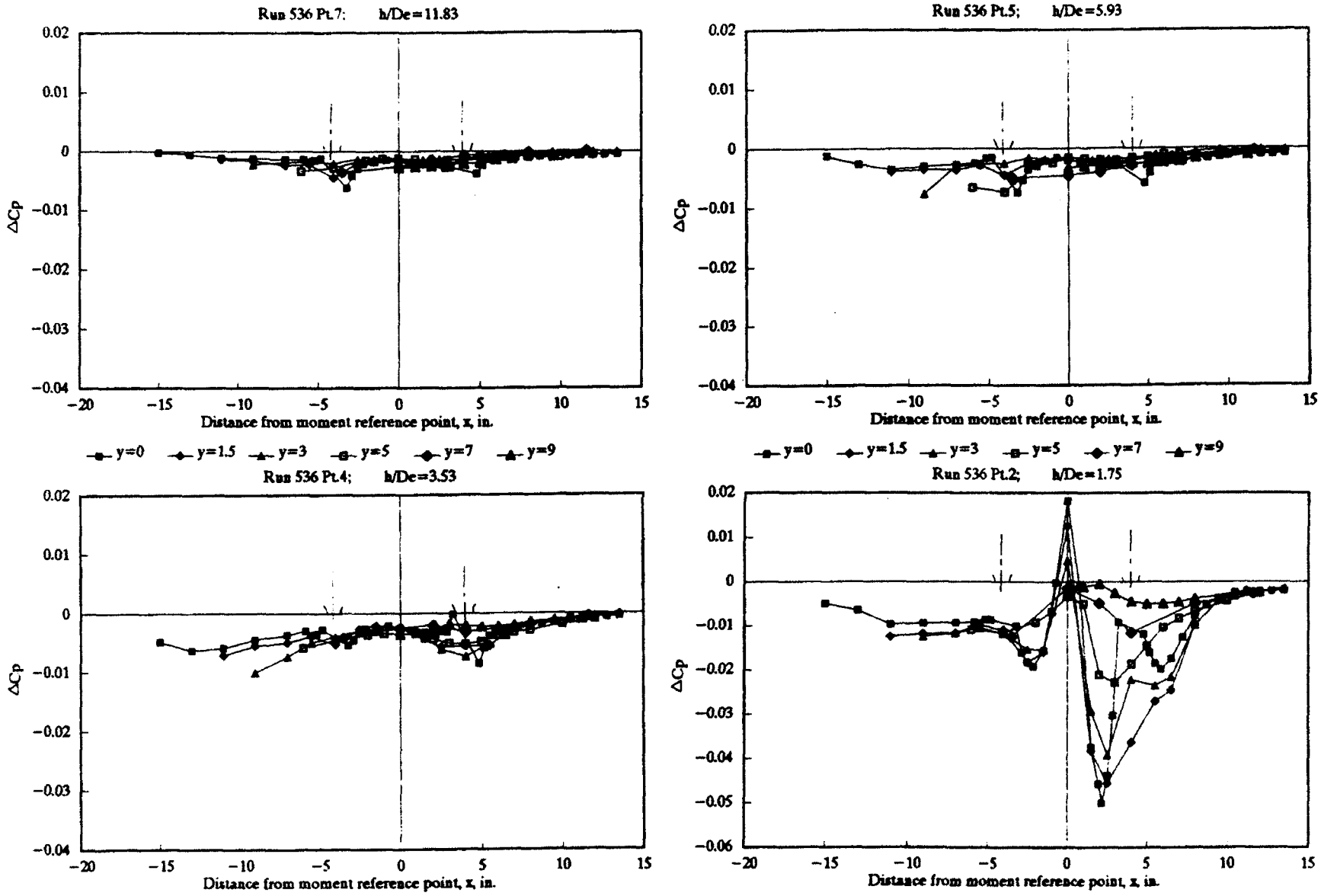

Fig.B-4 Chordwise distributions of jet induced pressure at selected heights - Configuration I - Both Jets
NPR=2 Run 536 Ve=.06

TABLE B-5 JET INDUCED PRESSURE INCREMENTS

Configuration I - Both Jets - NPR=2

Run 537 Ve=.08

	Point	1	2	3	4	5	6	7	8
	h/De =	25.67	11.8	8.86	5.9	3.53	2.36	1.76	1.17
y	x	ΔCp	ΔCp	ΔCp	ΔCp	ΔCp	ΔCp	ΔCp	ΔCp
0	-15	-0.0000	-0.0001	-0.0001	-0.0001	-0.0017	-0.0010	0.0003	0.0032
0	-13	-0.0004	-0.0005	-0.0006	-0.0015	-0.0061	-0.0089	-0.0088	-0.0002
0	-11	-0.0009	-0.0009	-0.0012	-0.0029	-0.0083	-0.0131	-0.0146	-0.0186
0	-9	-0.0012	-0.0013	-0.0017	-0.0031	-0.0063	-0.0101	-0.0130	-0.0230
0	-7	-0.0004	-0.0005	-0.0006	-0.0008	-0.0005	-0.0006	-0.0014	-0.0020
0	-5.85	-0.0014	-0.0016	-0.0020	-0.0029	-0.0043	-0.0073	-0.0106	-0.0201
0	-5.5	-0.0017	-0.0016	-0.0020	-0.0029	-0.0039	-0.0072	-0.0107	-0.0203
0	-5.15	-0.0009	-0.0010	-0.0015	-0.0016	-0.0020	-0.0063	-0.0102	-0.0194
0	-4.8	-0.0004	-0.0004	-0.0009	-0.0009	-0.0018	-0.0057	-0.0104	-0.0196
0	-3.2	-0.0087	-0.0089	-0.0094	-0.0083	-0.0069	-0.0060	-0.0105	-0.0221
0	-2.85	-0.0056	-0.0065	-0.0063	-0.0065	-0.0054	-0.0063	-0.0144	-0.0255
0	-2.5	-0.0037	-0.0033	-0.0038	-0.0037	-0.0031	-0.0062	-0.0174	-0.0265
0	-2.15	-0.0028	-0.0026	-0.0026	-0.0022	-0.0021	-0.0061	-0.0186	-0.0314
0	-1.5	-0.0028	-0.0027	-0.0030	-0.0024	-0.0024	-0.0067	-0.0169	-0.0495
0	-0.75	-0.0023	-0.0022	-0.0024	-0.0020	-0.0022	-0.0038	-0.0042	-0.0414
0	0	-0.0023	-0.0025	-0.0026	-0.0025	-0.0028	-0.0001	0.0156	0.0236
0	0.75	-0.0023	-0.0029	-0.0029	-0.0028	-0.0038	-0.0018	-0.0029	-0.0011
0	1.5	-0.0025	-0.0034	-0.0031	-0.0031	-0.0041	-0.0147	-0.0411	-0.0791
0	1.95	-0.0029	-0.0028	-0.0031	-0.0029	-0.0042	-0.0207	-0.0507	-0.0868
0	2.15	-0.0032	-0.0032	-0.0034	-0.0031	-0.0043	-0.0239	-0.0543	-0.0912
0	2.5	-0.0030	-0.0031	-0.0029	-0.0026	-0.0037	-0.0223	-0.0479	-0.0782
0	2.85	-0.0035	-0.0040	-0.0037	-0.0034	-0.0036	-0.0154	-0.0337	-0.0550
0	3.2	-0.0031	-0.0036	-0.0030	-0.0025	-0.0027	-0.0011	-0.0133	-0.0333
0	4.8	-0.0048	-0.0061	-0.0061	-0.0064	-0.0090	-0.0156	-0.0157	-0.0183
0	5.15	-0.0035	-0.0042	-0.0043	-0.0040	-0.0073	-0.0162	-0.0193	-0.0238
0	5.5	-0.0021	-0.0027	-0.0029	-0.0026	-0.0048	-0.0140	-0.0215	-0.0248
0	5.85	-0.0020	-0.0026	-0.0028	-0.0033	-0.0044	-0.0138	-0.0232	-0.0236
0	6.5	-0.0017	-0.0019	-0.0023	-0.0024	-0.0035	-0.0105	-0.0198	-0.0186
0	7.25	-0.0018	-0.0017	-0.0021	-0.0025	-0.0029	-0.0088	-0.0143	-0.0148
0	8	-0.0010	-0.0012	-0.0014	-0.0021	-0.0020	-0.0065	-0.0092	-0.0132
0	8.75	-0.0011	-0.0013	-0.0015	-0.0021	-0.0021	-0.0052	-0.0082	-0.0132
0	9.5	-0.0011	-0.0013	-0.0016	-0.0020	-0.0019	-0.0040	-0.0045	-0.0133
0	10.5	-0.0005	-0.0008	-0.0010	-0.0012	-0.0009	-0.0024	-0.0031	-0.0122
0	11.25	-0.0006	-0.0008	-0.0010	-0.0012	-0.0011	-0.0019	-0.0027	-0.0109
0	12	-0.0006	-0.0008	-0.0011	-0.0011	-0.0011	-0.0014	-0.0024	-0.0092
0	12.75	-0.0006	-0.0006	-0.0011	-0.0010	-0.0010	-0.0010	-0.0023	-0.0072
0	13.5	-0.0004	-0.0006	-0.0008	-0.0008	-0.0007	-0.0008	-0.0019	-0.0046
0.8	-4	-0.0239	-0.0243	-0.0253	-0.0281	-0.0186	-0.0103	-0.0103	-0.0194
0.8	4	-0.0107	-0.0122	-0.0126	-0.0121	-0.0277	-0.0306	-0.0190	-0.0423
1.5	-11	-0.0012	-0.0012	-0.0016	-0.0034	-0.0087	-0.0128	-0.0150	-0.0177
1.5	-9	-0.0014	-0.0015	-0.0019	-0.0039	-0.0078	-0.0117	-0.0146	-0.0264
1.5	-7	-0.0026	-0.0027	-0.0031	-0.0047	-0.0068	-0.0099	-0.0127	-0.0228
1.5	-5.5	-0.0031	-0.0032	-0.0037	-0.0048	-0.0046	-0.0076	-0.0103	-0.0192
1.5	-4	-0.0077	-0.0077	-0.0083	-0.0099	-0.0062	-0.0073	-0.0107	-0.0226
1.5	-2.5	-0.0031	-0.0033	-0.0033	-0.0045	-0.0033	-0.0050	-0.0156	-0.0324
1.5	-1.5	-0.0022	-0.0027	-0.0025	-0.0027	-0.0024	-0.0060	-0.0152	-0.0485
1.5	0	-0.0015	-0.0018	-0.0018	-0.0019	-0.0024	0.0008	0.0159	0.0204
1.5	1.5	-0.0021	-0.0024	-0.0026	-0.0030	-0.0047	-0.0165	-0.0415	-0.0796
1.5	2.5	-0.0027	-0.0030	-0.0032	-0.0029	-0.0062	-0.0269	-0.0489	-0.0706
1.8	4	-0.0006	-0.0006	-0.0009	-0.0008	-0.0008	-0.0008	-0.0012	-0.0012
1.5	5.5	-0.0015	-0.0019	-0.0018	-0.0020	-0.0045	-0.0130	-0.0236	-0.0365
1.5	6.5	-0.0011	-0.0011	-0.0012	-0.0018	-0.0028	-0.0104	-0.0212	-0.0221
1.5	8	-0.0009	-0.0009	-0.0011	-0.0013	-0.0020	-0.0070	-0.0119	-0.0136
1.5	9.5	-0.0007	-0.0011	-0.0011	-0.0012	-0.0014	-0.0043	-0.0067	-0.0126
1.5	10.5	-0.0006	-0.0010	-0.0009	-0.0009	-0.0010	-0.0026	-0.0038	-0.0120
1.5	12	-0.0007	-0.0009	-0.0009	-0.0009	-0.0008	-0.0013	-0.0023	-0.0087
1.5	13.5	-0.0002	-0.0004	-0.0005	-0.0006	-0.0004	-0.0006	-0.0017	-0.0039
3	-9	-0.0014	-0.0018	-0.0024	-0.0042	-0.0105	-0.0127	-0.0158	-0.0224
3	-7	-0.0021	-0.0022	-0.0026	-0.0044	-0.0085	-0.0100	-0.0129	-0.0242

	Point	1	2	3	4	5	6	7	8
	h/De =	25.67	11.8	8.86	5.9	3.53	2.36	1.76	1.17
y	x	ΔCp	ΔCp	ΔCp	ΔCp	ΔCp	ΔCp	ΔCp	ΔCp
3	-5.5	-0.0024	-0.0026	-0.0029	-0.0046	-0.0049	-0.0073	-0.0108	-0.0190
3	-4	-0.0032	-0.0032	-0.0037	-0.0049	-0.0040	-0.0060	-0.0109	-0.0191
3	-2.5	-0.0022	-0.0022	-0.0026	-0.0033	-0.0023	-0.0050	-0.0155	-0.0289
3	-1.5	-0.0019	-0.0023	-0.0025	-0.0026	-0.0027	-0.0059	-0.0142	-0.0406
3	0	-0.0015	-0.0018	-0.0021	-0.0025	-0.0027	-0.0006	0.0068	0.0069
3	1.5	-0.0018	-0.0021	-0.0024	-0.0028	-0.0042	-0.0126	-0.0326	-0.0651
3	2.5	-0.0016	-0.0022	-0.0024	-0.0029	-0.0059	-0.0216	-0.0411	-0.0618
3	4	-0.0016	-0.0023	-0.0025	-0.0027	-0.0069	-0.0172	-0.0223	-0.0379
3	5.5	-0.0009	-0.0014	-0.0016	-0.0018	-0.0048	-0.0095	-0.0207	-0.0292
3	6.5	-0.0011	-0.0014	-0.0014	-0.0019	-0.0039	-0.0079	-0.0192	-0.0207
3	8	-0.0006	-0.0009	-0.0008	-0.0011	-0.0021	-0.0060	-0.0109	-0.0141
3	9.5	-0.0001	-0.0004	-0.0003	-0.0005	-0.0009	-0.0035	-0.0054	-0.0121
3	10.5	-0.0004	-0.0007	-0.0006	-0.0008	-0.0011	-0.0027	-0.0040	-0.0111
3	12	0.0001	-0.0002	-0.0003	-0.0002	-0.0006	-0.0010	-0.0023	-0.0072
3	13.5	-0.0000	-0.0004	-0.0005	-0.0003	-0.0002	-0.0008	-0.0019	-0.0035
5	-6	-0.0034	-0.0037	-0.0045	-0.0085	-0.0114	-0.0093	-0.0125	-0.0238
5	-4	-0.0022	-0.0026	-0.0032	-0.0052	-0.0060	-0.0068	-0.0108	-0.0139
5	-2	-0.0016	-0.0020	-0.0026	-0.0027	-0.0043	-0.0060	-0.0081	-0.0169
5	-1	-0.0015	-0.0019	-0.0025	-0.0024	-0.0034	-0.0047	-0.0067	-0.0175
5	0	-0.0014	-0.0017	-0.0022	-0.0022	-0.0028	-0.0019	-0.0020	0.0022
5	1	-0.0014	-0.0016	-0.0022	-0.0023	-0.0028	-0.0023	-0.0069	-0.0066
5	2	-0.0019	-0.0022	-0.0026	-0.0029	-0.0038	-0.0093	-0.0214	-0.0364
5	3	-0.0016	-0.0021	-0.0024	-0.0027	-0.0049	-0.0127	-0.0236	-0.0336
5	4	-0.0014	-0.0018	-0.0021	-0.0027	-0.0051	-0.0128	-0.0195	-0.0251
5	5	-0.0010	-0.0014	-0.0018	-0.0021	-0.0048	-0.0105	-0.0152	-0.0201
5	6	-0.0007	-0.0011	-0.0014	-0.0017	-0.0037	-0.0074	-0.0111	-0.0169
5	7	-0.0005	-0.0009	-0.0011	-0.0015	-0.0032	-0.0058	-0.0090	-0.0155
5	8	-0.0006	-0.0010	-0.0013	-0.0014	-0.0027	-0.0049	-0.0076	-0.0144
5	10	-0.0006	-0.0010	-0.0012	-0.0011	-0.0019	-0.0034	-0.0060	-0.0110
5	12	-0.0003	-0.0006	-0.0008	-0.0007	-0.0011	-0.0019	-0.0031	-0.0053
6.6	-3.5	-0.0039	-0.0044	-0.0056	-0.0079	-0.0063	-0.0072	-0.0123	-0.0114
7	0	-0.0012	-0.0017	-0.0023	-0.0054	-0.0036	-0.0036	-0.0012	-0.0004
7	2	-0.0009	-0.0012	-0.0017	-0.0031	-0.0034	-0.0024	-0.0046	-0.0058
7	4	-0.0006	-0.0010	-0.0014	-0.0018	-0.0031	-0.0066	-0.0116	-0.0129
7	8	-0.0000	-0.0004	-0.0006	-0.0009	-0.0019	-0.0039	-0.0061	-0.0089
7	11.6	0.0003	-0.0000	-0.0002	-0.0003	-0.0007	-0.0018	-0.0029	-0.0026
8.5	0	-0.0035	-0.0040	-0.0050	-0.0061	-0.0038	-0.0054	-0.0053	-0.0021
9	1	-0.0031	-0.0037	-0.0046	-0.0065	-0.0036	-0.0047	-0.0031	-0.0018
9	2	-0.0028	-0.0034	-0.0043	-0.0054	-0.0037	-0.0036	-0.0017	-0.0022
9	3	-0.0016	-0.0022	-0.0030	-0.0047	-0.0030	-0.0024	-0.0024	-0.0028
9	4	-0.0012	-0.0017	-0.0023	-0.0043	-0.0027	-0.0028	-0.0045	-0.0029
9	5	-0.0009	-0.0014	-0.0019	-0.0039	-0.0025	-0.0031	-0.0048	-0.0026
9	6	-0.0007	-0.0011	-0.0015	-0.0033	-0.0025	-0.0034	-0.0064	-0.0022
9	7	-0.0006	-0.0009	-0.0014	-0.0028	-0.0023	-0.0033	-0.0050	-0.0016
9	8	-0.0002	-0.0006	-0.0009	-0.0022	-0.0018	-0.0030	-0.0043	-0.0012
9	11.2	-0.0001	-0.0004	-0.0007	-0.0011	-0.0011	-0.0021	-0.0027	-0.0006
10	4	-0.0023	-0.0027	-0.0037	-0.0047	-0.0034	-0.0033	-0.0026	-0.0030
11	4	-0.0023	-0.0030	-0.0038	-0.0044	-0.0039	-0.0042	-0.0026	-0.0021
11	8	-0.0008	-0.0011	-0.0017	-0.0027	-0.0018	-0.0014	-0.0014	-0.0009
12	8	-0.0007	-0.0011	-0.0019	-0.0023	-0.0016	-0.0011	-0.0008	-0.0008
12	10.6	-0.0003	-0.0006	-0.0011	-0.0016	-0.0010	-0.0005	-0.0004	-0.0004
13	8	-0.0011	-0.0015	-0.0020	-0.0023	-0.0023	-0.0021	-0.0018	-0.0012

Force and Moment Summary

	h/De =	25.67	11.8	8.86	5.9	3.53	2.36	1.76	1.17
Balance	dL/T =	-0.169	-0.183	-0.218	-0.293	-0.378	-0.829	-0.926	-1.475
Pressure	dL/T =	-0.140	-0.173	-0.211	-0.292	-0.365	-0.591	-0.914	-1.432
Balance	dM/TDe =	-0.080	-0.049	-0.040	-0.086	-0.269	0.075	0.359	0.739
Pressure	dM/TDe =	-0.031	0.047	0.083	0.030	-0.148	0.147	0.553	0.802

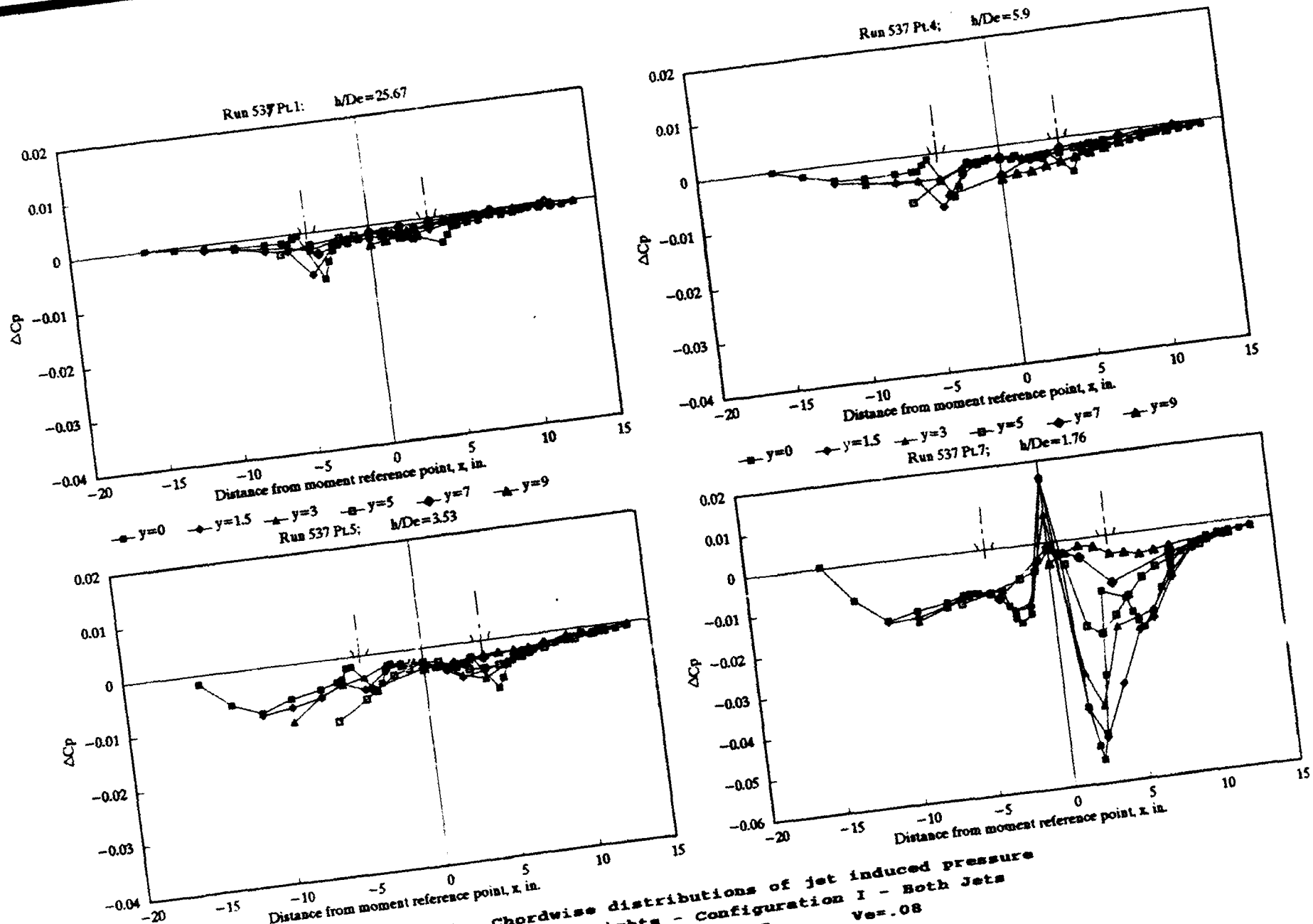

Fig.B-5 Chordwise distributions of jet induced pressure
selected heights - Configuration I - Both Jets
Run 537 Ve=.08

TABLE B-6 JET INDUCED PRESSURE INCREMENTS

Configuration I - Both Jets - NPR=2

Run 538 Ve=.1

	Point	1	2	3	4	5	6	7	8	9
	h/De =	1.19	1.78	2.39	3.55	5.94	8.87	11.78	17.6	25.7
y	x	ΔCp	ΔCp	ΔCp	ΔCp	ΔCp	ΔCp	ΔCp	ΔCp	ΔCp
0	-15	0.0050	0.0041	0.0030	0.0015	0.0004	0.0001	0.0001	0.0001	0.0001
0	-13	0.0042	-0.0025	-0.0054	-0.0028	-0.0004	-0.0003	-0.0003	-0.0004	-0.0003
0	-11	-0.0132	-0.0169	-0.0145	-0.0075	-0.0015	-0.0009	-0.0006	-0.0008	-0.0006
0	-9	-0.0278	-0.0169	-0.0130	-0.0079	-0.0024	-0.0014	-0.0012	-0.0012	-0.0012
0	-7	-0.0025	-0.0015	-0.0009	-0.0009	-0.0009	-0.0007	-0.0005	-0.0004	-0.0003
0	-5.85	-0.0213	-0.0114	-0.0079	-0.0038	-0.0026	-0.0019	-0.0018	-0.0016	-0.0017
0	-5.5	-0.0210	-0.0110	-0.0075	-0.0038	-0.0027	-0.0019	-0.0018	-0.0017	-0.0017
0	-5.15	-0.0201	-0.0097	-0.0064	-0.0016	-0.0011	-0.0006	-0.0003	-0.0005	-0.0003
0	-4.8	-0.0208	-0.0094	-0.0046	-0.0004	0.0003	0.0008	0.0009	0.0009	0.0009
0	-3.2	-0.0211	-0.0087	-0.0056	-0.0089	-0.0135	-0.0121	-0.0116	-0.0109	-0.0112
0	-2.85	-0.0249	-0.0107	-0.0057	-0.0073	-0.0106	-0.0094	-0.0088	-0.0081	-0.0082
0	-2.5	-0.0264	-0.0119	-0.0049	-0.0044	-0.0061	-0.0052	-0.0047	-0.0042	-0.0041
0	-2.15	-0.0296	-0.0126	-0.0042	-0.0025	-0.0030	-0.0034	-0.0027	-0.0024	-0.0022
0	-1.5	-0.0482	-0.0128	-0.0035	-0.0019	-0.0030	-0.0023	-0.0022	-0.0022	-0.0021
0	-0.75	-0.0396	-0.0046	-0.0020	-0.0018	-0.0023	-0.0019	-0.0017	-0.0017	-0.0017
0	0	0.0261	0.0087	-0.0007	-0.0027	-0.0027	-0.0022	-0.0018	-0.0021	-0.0017
0	0.75	-0.0084	-0.0027	-0.0030	-0.0029	-0.0030	-0.0024	-0.0020	-0.0022	-0.0018
0	1.5	-0.0828	-0.0365	-0.0116	-0.0042	-0.0033	-0.0027	-0.0023	-0.0024	-0.0019
0	1.95	-0.0878	-0.0478	-0.0156	-0.0038	-0.0031	-0.0025	-0.0019	-0.0020	-0.0020
0	2.15	-0.0914	-0.0511	-0.0177	-0.0035	-0.0026	-0.0035	-0.0020	-0.0025	-0.0025
0	2.5	-0.0799	-0.0467	-0.0158	-0.0044	-0.0025	-0.0032	-0.0013	-0.0015	-0.0019
0	2.85	-0.0575	-0.0314	-0.0100	-0.0034	-0.0023	-0.0030	-0.0018	-0.0016	-0.0022
0	3.2	-0.0350	-0.0083	0.0013	-0.0012	-0.0006	-0.0009	-0.0001	-0.0004	-0.0012
0	4.8	-0.0189	-0.0166	-0.0194	-0.0113	-0.0092	-0.0067	-0.0056	-0.0053	-0.0058
0	5.15	-0.0246	-0.0206	-0.0199	-0.0096	-0.0062	-0.0044	-0.0031	-0.0031	-0.0030
0	5.5	-0.0253	-0.0220	-0.0168	-0.0069	-0.0040	-0.0028	-0.0013	-0.0013	-0.0014
0	5.85	-0.0243	-0.0225	-0.0133	-0.0056	-0.0036	-0.0026	-0.0014	-0.0013	-0.0017
0	6.5	-0.0194	-0.0211	-0.0093	-0.0041	-0.0028	-0.0026	-0.0015	-0.0012	-0.0010
0	7.25	-0.0157	-0.0165	-0.0071	-0.0033	-0.0028	-0.0022	-0.0015	-0.0012	-0.0009
0	8	-0.0138	-0.0103	-0.0051	-0.0025	-0.0022	-0.0016	-0.0008	-0.0004	-0.0002
0	8.75	-0.0132	-0.0063	-0.0043	-0.0024	-0.0024	-0.0019	-0.0011	-0.0008	-0.0005
0	9.5	-0.0130	-0.0041	-0.0035	-0.0021	-0.0023	-0.0018	-0.0012	-0.0007	-0.0006
0	10.5	-0.0121	-0.0022	-0.0023	-0.0014	-0.0015	-0.0012	-0.0006	-0.0002	-0.0001
0	11.25	-0.0111	-0.0018	-0.0021	-0.0011	-0.0015	-0.0013	-0.0007	-0.0002	-0.0001
0	12	-0.0094	-0.0018	-0.0017	-0.0009	-0.0014	-0.0014	-0.0008	-0.0003	-0.0002
0	12.75	-0.0071	-0.0014	-0.0013	-0.0010	-0.0014	-0.0013	-0.0008	-0.0004	-0.0003
0	13.5	-0.0048	-0.0011	-0.0009	-0.0007	-0.0011	-0.0010	-0.0006	-0.0004	-0.0002
0.8	-4	-0.0202	-0.0117	-0.0136	-0.0295	-0.0364	-0.0337	-0.0323	-0.0325	-0.0327
0.8	4	-0.0451	-0.0211	-0.0413	-0.0340	-0.0193	-0.0167	-0.0178	-0.0173	-0.0167
1.5	-11	-0.0111	-0.0170	-0.0149	-0.0081	-0.0019	-0.0012	-0.0011	-0.0012	-0.0011
1.5	-9	-0.0309	-0.0188	-0.0149	-0.0091	-0.0028	-0.0015	-0.0013	-0.0014	-0.0014
1.5	-7	-0.0254	-0.0147	-0.0118	-0.0082	-0.0044	-0.0033	-0.0030	-0.0030	-0.0030
1.5	-5.5	-0.0210	-0.0108	-0.0060	-0.0069	-0.0053	-0.0041	-0.0038	-0.0038	-0.0038
1.5	-	-0.0221	-0.0084	-0.0074	-0.0103	-0.0129	-0.0115	-0.0105	-0.0104	-0.0106
1.5	-2.5	-0.0300	-0.0095	-0.0040	-0.0043	-0.0054	-0.0043	-0.0037	-0.0035	-0.0032
1.5	-1.5	-0.0483	-0.0118	-0.0032	-0.0033	-0.0036	-0.0028	-0.0024	-0.0027	-0.0025
1.5	0	0.0214	0.0100	-0.0013	-0.0022	-0.0027	-0.0021	-0.0014	-0.0015	-0.0017
1.5	1.5	-0.0812	-0.0354	-0.0123	-0.0045	-0.0031	-0.0030	-0.0018	-0.0019	-0.0020
1.5	2.8	-0.0716	-0.0484	-0.0244	-0.0083	-0.0038	-0.0036	-0.0032	-0.0027	-0.0027
1.5	4	-0.0016	-0.0012	-0.0010	-0.0010	-0.0012	-0.0012	-0.0010	-0.0007	-0.0007
1.5	5.5	-0.0407	-0.0228	-0.0138	-0.0047	-0.0020	-0.0017	-0.0013	-0.0012	-0.0008
1.5	6.5	-0.0240	-0.0223	-0.0090	-0.0031	-0.0018	-0.0012	-0.0006	0.0001	-0.0001
1.5	8	-0.0139	-0.0106	-0.0055	-0.0018	-0.0014	-0.0010	-0.0004	0.0003	-0.0000
1.5	9.5	-0.0127	-0.0042	-0.0038	-0.0013	-0.0013	-0.0010	-0.0006	-0.0002	-0.0001
1.5	10.5	-0.0119	-0.0027	-0.0030	-0.0008	-0.0011	-0.0010	-0.0004	-0.0001	0.0001
1.5	12	-0.0087	-0.0017	-0.0019	-0.0008	-0.0008	-0.0010	-0.0004	-0.0001	-0.0000
1.5	13.5	-0.0044	-0.0010	-0.0008	-0.0004	-0.0006	-0.0006	-0.0003	0.0000	0.0002
3	-9	-0.0246	-0.0154	-0.0122	-0.0062	-0.0016	-0.0016	-0.0015	-0.0015	-0.0012
3	-7	-0.0259	-0.0142	-0.0118	-0.0083	-0.0040	-0.0027	-0.0024	-0.0024	-0.0024
3	-5.5	-0.0204	-0.0099	-0.0085	-0.0064	-0.0047	-0.0035	-0.0030	-0.0030	-0.0032
3	-4	-0.0187	-0.0082	-0.0060	-0.0054	-0.0059	-0.0046	-0.0044	-0.0043	-0.0043
3	-2.5	-0.0266	-0.0091	-0.0037	-0.0036	-0.0047	-0.0036	-0.0034	-0.0032	-0.0029
3	-1.5	-0.0406	-0.0108	-0.0036	-0.0031	-0.0038	-0.0030	-0.0027	-0.0026	-0.0026
3	0	0.0082	0.0031	-0.0035	-0.0030	-0.0030	-0.0022	-0.0017	-0.0016	-0.0016
3	1.5	-0.0675	-0.0270	-0.0105	-0.0047	-0.0035	-0.0027	-0.0022	-0.0020	-0.0019
3	2.5	-0.0832	-0.0365	-0.0178	-0.0057	-0.0036	-0.0031	-0.0023	-0.0022	-0.0020
3	4	-0.0393	-0.0235	-0.0166	-0.0076	-0.0037	-0.0033	-0.0025	-0.0023	-0.0021
3	5.5	-0.0296	-0.0170	-0.0089	-0.0052	-0.0025	-0.0019	-0.0013	-0.0011	-0.0009
3	6.5	-0.0215	-0.0163	-0.0075	-0.0036	-0.0022	-0.0016	-0.0006	-0.0005	-0.0005
3	8	-0.0143	-0.0100	-0.0050	-0.0016	-0.0011	-0.0008	-0.0003	0.0002	0.0002
3	9.5	-0.0121	-0.0044	-0.0031	-0.0006	-0.0006	-0.0006	-0.0000	0.0005	0.0003
3	10.5	-0.0115	-0.0031	-0.0030	-0.0006	-0.0008	-0.0009	-0.0004	0.0000	-0.0001
3	12	-0.0082	-0.0018	-0.0019	-0.0001	-0.0004	-0.0003	-0.0000	0.0002	0.0004
3	13.5	-0.0035	-0.0012	-0.0006	-0.0002	-0.0004	-0.0003	0.0001	0.0002	0.0003
5	-6	-0.0242	-0.0138	-0.0152	-0.0174	-0.0062	-0.0043	-0.0041	-0.0041	-0.0041
5	-4	-0.0135	-0.0091	-0.0078	-0.0061	-0.0039	-0.0032	-0.0029	-0.0028	-0.0028
5	-2	-0.0167	-0.0077	-0.0042	-0.0022	-0.0036	-0.0029	-0.0023	-0.0022	-0.0022
5	-1	-0.0189	-0.0067	-0.0036	-0.0020	-0.0035	-0.0028	-0.0023	-0.0021	-0.0021
5	0	0.0019	-0.0034	-0.0032	-0.0021	-0.0032	-0.0028	-0.0019	-0.0018	-0.0018
5	1	-0.0047	-0.0036	-0.0036	-0.0026	-0.0031	-0.0025	-0.0020	-0.0018	-0.0017
5	2	-0.0372	-0.0180	-0.0078	-0.0044	-0.0037	-0.0031	-0.0024	-0.0023	-0.0022
5	3	-0.0346	-0.0206	-0.0109	-0.0048	-0.0036	-0.0027	-0.0022	-0.0019	-0.0019
5	4	-0.0261	-0.0186	-0.0119	-0.0067	-0.0035	-0.0027	-0.0022	-0.0019	-0.0018
5	5	-0.0207	-0.0146	-0.0096	-0.0060	-0.0031	-0.0021	-0.0016	-0.0013	-0.0012
5	6	-0.0165	-0.0106	-0.0073	-0.0043	-0.0024	-0.0016	-0.0011	-0.0009	-0.0008
5	7	-0.0151	-0.0085	-0.0058	-0.0034	-0.0022	-0.0014	-0.0009	-0.0006	-0.0005
5	8	-0.0141	-0.0067	-0.0047	-0.0028	-0.0019	-0.0013	-0.0009	-0.0007	-0.0005
5	10	-0.0115	-0.0041	-0.0030	-0.0017	-0.0014	-0.0012	-0.0007	-0.0005	-0.0003
5	12	-0.0059	-0.0024	-0.0016	-0.0010	-0.0009	-0.0008	-0.0004	-0.0002	-0.0001
6.6	-3.5	-0.0119	-0.0103	-0.0078	-0.0086	-0.0078	-0.0056	-0.0052	-0.0049	-0.0051
7	0	-0.0010	-0.0028	-0.0041	-0.0056	-0.0033	-0.0022	-0.0017	-0.0016	-0.0016
7	2	-0.0047	-0.0031	-0.0025	-0.0041	-0.0029	-0.0021	-0.0015	-0.0013	-0.0012
7	4	-0.0140	-0.0103	-0.0053	-0.0038	-0.0026	-0.0016	-0.0012	-0.0010	-0.0009
7	6	-0.0106	-0.0058	-0.0039	-0.0024	-0.0017	-0.0008	-0.0003	-0.0001	0.0001
7	11.6	-0.0029	-0.0026	-0.0016	-0.0008	-0.0005	-0.0002	0.0002	0.0004	0.0006
8.5	0	-0.0023	-0.0063	-0.0047	-0.0058	-0.0073	-0.0054	-0.0051	-0.0044	-0.0047
9	1	-0.0021	-0.0050	-0.0047	-0.0051	-0.0068	-0.0048	-0.0045	-0.0039	-0.0043
9	2	-0.0026	-0.0030	-0.0048	-0.0049	-0.0062	-0.0034	-0.0034	[illegible]	-0.0034
9	3	-0.0032	-0.0023	-0.0033	-0.0039	-0.0034	-0.0019	-0.0017	-0.0014	-0.0015
9	4	-0.0037	-0.0035	-0.0029	-0.0036	-0.0029	-0.0019	-0.0013	-0.0011	-0.0010
9	5	-0.0030	-0.0040	-0.0029	-0.0032	-0.0026	-0.0016	-0.0010	-0.0008	-0.0007
9	6	-0.0028	-0.0047	-0.0031	-0.0031	-0.0026	-0.0016	-0.0010	-0.0007	-0.0007
9	7	-0.0022	-0.0046	-0.0029	-0.0027	-0.0023	-0.0014	-0.0008	-0.0006	-0.0006
9	8	-0.0019	-0.0043	-0.0028	-0.0024	-0.0020	-0.0012	-0.0006	-0.0003	-0.0002
9	11.2	-0.0016	-0.0027	-0.0019	-0.0014	-0.0013	-0.0006	-0.0002	-0.0000	0.0001
10	4	-0.0031	-0.0029	-0.0039	-0.0042	-0.0046	-0.0029	-0.0028	-0.0024	-0.0027
11	4	-0.0022	-0.0041	-0.0048	-0.0045	-0.0062	-0.0043	-0.0033	-0.0030	-0.0031
11	8	-0.0014	-0.0016	-0.0017	-0.0023	-0.0023	-0.0013	-0.0009	-0.0006	-0.0006
12	8	-0.0010	-0.0010	-0.0015	-0.0021	-0.0023	-0.0012	-0.0008	-0.0006	-0.0007
12	10.6	-0.0007	-0.0008	-0.0007	-0.0015	-0.0015	-0.0008	-0.0003	-0.0001	-0.0000
13	6	-0.0012	-0.0020	-0.0023	-0.0024	-0.0033	-0.0021	-0.0014	-0.0012	-0.0014

Force and Moment Summary

	h/De =	1.19	1.78	2.39	3.55	5.94	8.87	11.78	17.6	25.7
Balance	dL/T =	-1.477	-0.905	-0.615	-0.425	-0.326	-0.243	-0.208	-0.192	-0.204
Pressure	dL/T =	-1.462	-0.858	-0.592	-0.408	-0.302	-0.224	-0.175	-0.155	-0.152
Balance	dM/TDe=	0.867	0.329	-0.035	-0.210	0.035	-0.036	-0.123	-0.156	-0.141
Pressure	dM/TDe=	0.983	0.437	0.045	-0.090	0.160	0.095	-0.032	-0.104	-0.117

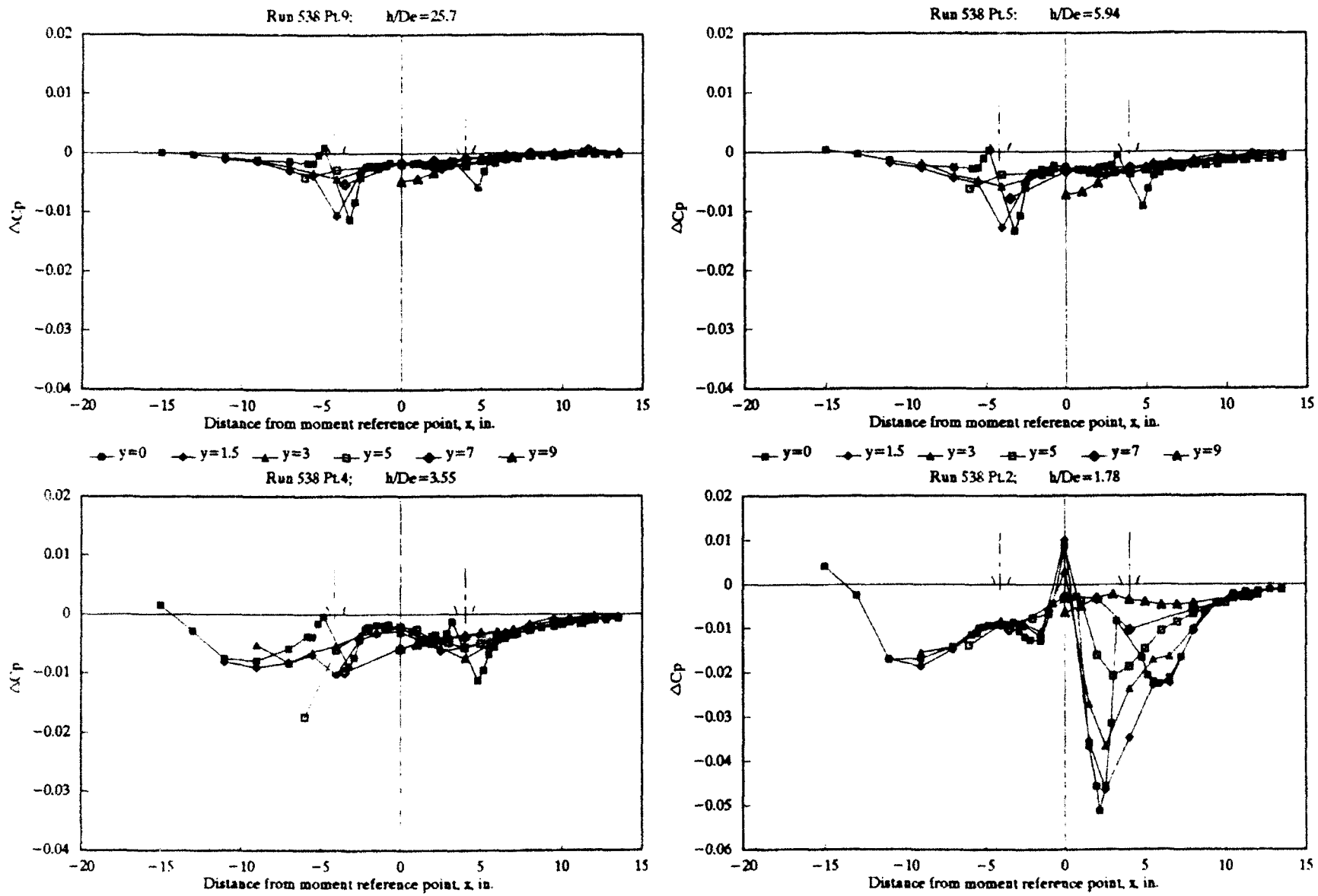

Fig.B-6 Chordwise distributions of jet induced pressure at selected heights - Configuration I - Both Jets
NPR=2 Run 538 Ve=.1

TABLE B-7 JET INDUCED PRESSURE INCREMENTS

Configuration I - Both Jets - NPR=2

Run 539 Ve=.15

	Point	1	2	3	4	5	6	7	8	9
	h/De =	25.68	17.67	11.73	8.8	5.84	3.5	2.38	1.8	1.18
y	x	ΔCp	ΔCp	ΔCp	ΔCp	ΔCp	ΔCp	ΔCp	ΔCp	ΔCp
0	-15	-0.0010	-0.0009	-0.0011	-0.0008	-0.0004	0.0018	0.0056	0.0061	0.0063
0	-13	-0.0012	-0.0011	-0.0013	-0.0009	-0.0004	0.0013	0.0061	0.0072	0.0080
0	-11	-0.0012	-0.0011	-0.0012	-0.0008	-0.0002	-0.0000	-0.0062	-0.0033	0.0086
0	-9	-0.0017	-0.0016	-0.0016	-0.0014	-0.0011	-0.0043	-0.0201	-0.0283	-0.0327
0	-7	-0.0020	-0.0023	-0.0024	-0.0027	-0.0030	-0.0036	-0.0040	-0.0042	-0.0058
0	-5.85	-0.0015	-0.0014	-0.0014	-0.0013	-0.0008	-0.0056	-0.0119	-0.0184	-0.0278
0	-5.5	-0.0008	-0.0007	-0.0008	-0.0006	-0.0002	-0.0045	-0.0080	-0.0134	-0.0246
0	-5.15	0.0017	0.0019	0.0018	0.0018	0.0022	-0.0004	-0.0053	-0.0087	-0.0228
0	-4.8	0.0049	0.0052	0.0048	0.0052	0.0054	0.0038	-0.0010	-0.0057	-0.0202
0	-3.2	-0.0386	-0.0412	-0.0404	-0.0378	-0.0372	-0.0369	-0.0182	-0.0098	-0.0206
0	-2.85	-0.0344	-0.0341	-0.0339	-0.0320	-0.0309	-0.0313	-0.0153	-0.0087	-0.0222
0	-2.5	-0.0244	-0.0210	-0.0227	-0.0219	-0.0211	-0.0212	-0.0107	-0.0070	-0.0231
0	-2.15	-0.0181	-0.0153	-0.0166	-0.0181	-0.0157	-0.0156	-0.0071	-0.0061	-0.0251
0	-1.5	-0.0126	-0.0121	-0.0124	-0.0146	-0.0139	-0.0120	-0.0044	-0.0062	-0.0432
0	-0.75	-0.0104	-0.0109	-0.0101	-0.0114	-0.0122	-0.0086	-0.0026	-0.0029	-0.0444
0	0	-0.0094	-0.0106	-0.0094	-0.0103	-0.0109	-0.0082	-0.0031	0.0011	0.0192
0	0.75	-0.0086	-0.0101	-0.0088	-0.0092	-0.0099	-0.0081	-0.0041	-0.0028	-0.0006
0	1.5	-0.0077	-0.0101	-0.0081	-0.0084	-0.0091	-0.0077	-0.0067	-0.0263	-0.0676
0	1.95	-0.0076	-0.0088	-0.0076	-0.0074	-0.0084	-0.0074	-0.0067	-0.0364	-0.0868
0	2.15	-0.0090	-0.0086	-0.0075	-0.0086	-0.0077	-0.0081	-0.0067	-0.0376	-0.0890
0	2.5	-0.0089	-0.0068	-0.0082	-0.0065	-0.0066	-0.0074	-0.0062	-0.0336	-0.0871
0	2.85	-0.0086	-0.0064	-0.0082	-0.0067	-0.0061	-0.0069	-0.0037	-0.0203	-0.0644
0	3.2	-0.0068	-0.0033	-0.0067	-0.0046	-0.0043	-0.0056	0.0021	0.0002	-0.0367
0	4.8	-0.0190	-0.0195	-0.0200	-0.0211	-0.0270	-0.0344	-0.0388	-0.0270	-0.0231
0	5.15	-0.0135	-0.0138	-0.0143	-0.0139	-0.0198	-0.0257	-0.0368	-0.0294	-0.0298
0	5.5	-0.0100	-0.0101	-0.0104	-0.0093	-0.0141	-0.0183	-0.0267	-0.0270	-0.0307
0	5.85	-0.0094	-0.0086	-0.0090	-0.0078	-0.0118	-0.0158	-0.0202	-0.0232	-0.0286
0	6.5	-0.0086	-0.0072	-0.0084	-0.0067	-0.0090	-0.0122	-0.0136	-0.0171	-0.0230
0	7.25	-0.0059	-0.0062	-0.0056	-0.0056	-0.0078	-0.0101	-0.0112	-0.0131	-0.0181
0	8	-0.0047	-0.0065	-0.0047	-0.0049	-0.0074	-0.0090	-0.0093	-0.0109	-0.0160
0	8.75	-0.0039	-0.0062	-0.0042	-0.0051	-0.0069	-0.0081	-0.0075	-0.0081	-0.0151
0	9.5	-0.0038	-0.0047	-0.0040	-0.0050	-0.0067	-0.0071	-0.0065	-0.0070	-0.0148
0	10.5	-0.0034	-0.0041	-0.0036	-0.0048	-0.0065	-0.0061	-0.0053	-0.0059	-0.0141
0	11.25	-0.0032	-0.0039	-0.0033	-0.0046	-0.0061	-0.0054	-0.0047	-0.0053	-0.0128
0	12	-0.0029	-0.0037	-0.0029	-0.0039	-0.0054	-0.0045	-0.0038	-0.0043	-0.0109
0	12.75	-0.0025	-0.0031	-0.0024	-0.0033	-0.0048	-0.0037	-0.0032	-0.0033	-0.0086
0	13.5	-0.0020	-0.0024	-0.0019	-0.0023	-0.0037	-0.0027	-0.0023	-0.0023	-0.0067
0.8	-4	-0.0491	-0.0506	-0.0525	-0.0496	-0.0498	-0.0454	-0.0258	-0.0209	-0.0261
0.8	4	-0.0406	-0.0389	-0.0389	-0.0361	-0.0434	-0.0630	-0.0769	-0.0426	-0.0397
1.5	-11	-0.0015	-0.0014	-0.0013	-0.0010	-0.0004	-0.0004	-0.0043	-0.0025	0.0090
1.5	-9	-0.0020	-0.0019	-0.0020	-0.0016	-0.0011	-0.0048	-0.0214	-0.0303	-0.0309
1.5	-7	-0.0041	-0.0040	-0.0042	-0.0038	-0.0035	-0.0097	-0.0220	-0.0284	-0.0440
1.5	-5.5	-0.0067	-0.0066	-0.0069	-0.0064	-0.0060	-0.0105	-0.0141	-0.0168	-0.0256
1.5	-4	-0.0218	-0.0222	-0.0229	-0.0216	-0.0217	-0.0213	-0.0140	-0.0120	-0.0236
1.5	-2.5	-0.0133	-0.0128	-0.0129	-0.0123	-0.0129	-0.0116	-0.0071	-0.0066	-0.0277
1.5	-1.5	-0.0077	-0.0078	-0.0077	-0.0076	-0.0082	-0.0072	-0.0038	-0.0060	-0.0444
1.5	0	-0.0069	-0.0063	-0.0065	-0.0066	-0.0069	-0.0064	-0.0032	-0.0004	0.0189
1.5	1.5	-0.0071	-0.0061	-0.0069	-0.0065	-0.0078	-0.0078	-0.0099	-0.0268	-0.0666
1.5	2.5	-0.0067	-0.0066	-0.0060	-0.0074	-0.0098	-0.0120	-0.0166	-0.0429	-0.0813
1.5	4	-0.0031	-0.0030	-0.0033	-0.0036	-0.0038	-0.0039	-0.0038	-0.0036	-0.0039
1.5	5.5	-0.0065	-0.0073	-0.0065	-0.0063	-0.0060	-0.0180	-0.0173	-0.0229	-0.0800
1.5	6.5	-0.0050	-0.0045	-0.0037	-0.0044	-0.0064	-0.0100	-0.0112	-0.0168	-0.0292
1.5	8	-0.0034	-0.0034	-0.0032	-0.0032	-0.0054	-0.0076	-0.0076	-0.0104	-0.0172
1.5	9.5	-0.0030	-0.0029	-0.0030	-0.0029	-0.0046	-0.0059	-0.0059	-0.0070	-0.0147
1.5	10.5	-0.0027	-0.0030	-0.0030	-0.0028	-0.0045	-0.0063	-0.0050	-0.0062	-0.0136
1.5	12	-0.0021	-0.0025	-0.0029	-0.0025	-0.0040	-0.0039	-0.0039	-0.0048	-0.0107
1.5	13.5	-0.0018	-0.0021	-0.0024	-0.0026	-0.0032	-0.0031	-0.0029	-0.0033	-0.0063
3	-9	-0.0017	-0.0022	-0.0026	-0.0015	-0.0008	0.0005	-0.0086	-0.0167	-0.0084
3	-7	-0.0034	-0.0032	-0.0033	-0.0028	-0.0025	-0.0091	-0.0210	-0.0281	-0.0410

	Point	1	2	3	4	5	6	7	8	9
	h/De =	25.68	17.67	11.73	8.8	5.84	3.5	2.38	1.8	1.18
y	x	ΔCp	ΔCp	ΔCp	ΔCp	ΔCp	ΔCp	ΔCp	ΔCp	ΔCp
3	-5.5	-0.0059	-0.0058	-0.0059	-0.0064	-0.0063	-0.0108	-0.0156	-0.0182	-0.0278
3	-4	-0.0095	-0.0093	-0.0097	-0.0091	-0.0090	-0.0118	-0.0106	-0.0113	-0.0208
3	-2.5	-0.0088	-0.0084	-0.0088	-0.0082	-0.0082	-0.0087	-0.0081	-0.0065	-0.0274
3	-1.5	-0.0087	-0.0087	-0.0087	-0.0082	-0.0085	-0.0085	-0.0098	-0.0038	-0.0388
3	0	-0.0044	-0.0043	-0.0045	-0.0043	-0.0049	-0.0053	-0.0030	-0.0037	0.0015
3	1.5	-0.0050	-0.0048	-0.0048	-0.0044	-0.0057	-0.0084	-0.0091	-0.0208	-0.0686
3	2.5	-0.0056	-0.0060	-0.0057	-0.0064	-0.0087	-0.0085	-0.0188	-0.0344	-0.0887
3	4	-0.0073	-0.0075	-0.0069	-0.0065	-0.0086	-0.0135	-0.0202	-0.0288	-0.0403
3	5.5	-0.0061	-0.0062	-0.0046	-0.0047	-0.0085	-0.0114	-0.0136	-0.0181	-0.0320
3	6.5	-0.0034	-0.0034	-0.0030	-0.0031	-0.0052	-0.0063	-0.0095	-0.0116	-0.0234
3	8	-0.0017	-0.0018	-0.0015	-0.0017	-0.0035	-0.0055	-0.0063	-0.0088	-0.0188
3	9.5	-0.0011	-0.0010	-0.0011	-0.0013	-0.0029	-0.0039	-0.0046	-0.0064	-0.0149
3	10.5	-0.0014	-0.0012	-0.0013	-0.0015	-0.0026	-0.0034	-0.0041	-0.0052	-0.0130
3	12	-0.0014	-0.0011	-0.0014	-0.0016	-0.0027	-0.0033	-0.0038	-0.0042	-0.0098
3	13.5	-0.0014	-0.0014	-0.0016	-0.0018	-0.0027	-0.0027	-0.0026	-0.0032	-0.0086
5	-6	-0.0069	-0.0069	-0.0069	-0.0053	-0.0046	-0.0081	-0.0168	-0.0342	-0.0308
5	-4	-0.0061	-0.0061	-0.0061	-0.0045	-0.0042	-0.0076	-0.0099	-0.0120	-0.0157
5	-2	-0.0053	-0.0053	-0.0063	-0.0047	[illegible]	[illegible]	-0.0043	-0.0050	-0.0178
5	-1	-0.0048	-0.0048	-0.0049	-0.0043	-0.0044	-0.0058	-0.0032	-0.0034	-0.0208
5	0	-0.0050	-0.0050	-0.0049	-0.0045	-0.0049	-0.0058	-0.0027	-0.0041	-0.0098
5	1	-0.0048	-0.0048	-0.0047	-0.0042	-0.0048	-0.0057	-0.0041	-0.0060	-0.0026
5	2	-0.0052	[illegible]	-0.0051	-0.0048	-0.0055	-0.0066	-0.0078	-0.0133	-0.0364
5	3	-0.0048	-0.0047	-0.0048	-0.0043	-0.0054	-0.0073	-0.0109	-0.0171	-0.0379
5	4	-0.0054	-0.0053	-0.0053	-0.0051	-0.0056	-0.0094	-0.0139	-0.0197	-0.0304
5	5	-0.0046	-0.0045	-0.0047	-0.0044	-0.0060	-0.0090	-0.0126	-0.0166	-0.0237
5	6	-0.0042	-0.0040	-0.0041	-0.0042	-0.0058	-0.0089	-0.0109	-0.0137	-0.0197
5	7	-0.0032	-0.0031	-0.0033	-0.0033	-0.0049	-0.0074	-0.0086	-0.0108	-0.0179
5	8	-0.0025	-0.0023	-0.0023	-0.0024	-0.0040	-0.0061	-0.0068	-0.0084	-0.0161
5	10	-0.0018	-0.0016	-0.0017	-0.0018	-0.0031	-0.0041	-0.0044	-0.0057	-0.0131
5	12	-0.0015	-0.0014	-0.0015	-0.0016	-0.0026	-0.0029	-0.0033	-0.0041	-0.0076
6.8	-3.5	-0.0069	-0.0071	-0.0064	-0.0052	-0.0046	-0.0084	-0.0174	-0.0230	-0.0154
7	0	-0.0044	-0.0042	-0.0044	-0.0039	-0.0042	-0.0084	-0.0058	-0.0071	-0.0065
7	2	-0.0042	-0.0041	-0.0042	-0.0039	-0.0046	-0.0084	-0.0068	-0.0074	-0.0087
7	4	-0.0039	-0.0037	-0.0038	-0.0037	-0.0048	-0.0071	-0.0080	-0.0096	-0.0153
7	6	-0.0026	-0.0024	-0.0027	-0.0026	-0.0043	-0.0063	-0.0065	-0.0083	-0.0131
7	11.6	-0.0013	-0.0012	-0.0015	-0.0017	-0.0029	-0.0037	-0.0038	-0.0055	-0.0050
8.5	0	-0.0054	-0.0052	-0.0048	-0.0040	-0.0041	-0.0067	-0.0091	-0.0109	-0.0049
9	1	-0.0046	-0.0043	-0.0041	-0.0034	-0.0038	-0.0059	-0.0076	-0.0093	-0.0039
9	2	-0.0039	-0.0038	-0.0039	-0.0035	-0.0038	-0.0060	-0.0069	-0.0080	-0.0047
9	3	-0.0035	-0.0034	-0.0036	-0.0033	-0.0038	-0.0060	-0.0062	-0.0070	-0.0056
9	4	-0.0036	-0.0033	-0.0034	-0.0032	-0.0040	-0.0062	-0.0065	-0.0062	-0.0068
9	5	-0.0031	-0.0030	-0.0031	-0.0026	-0.0037	-0.0059	-0.0061	-0.0068	-0.0052
9	6	-0.0034	-0.0034	-0.0036	-0.0034	-0.0046	-0.0069	-0.0068	-0.0084	-0.0054
9	7	-0.0026	-0.0024	-0.0025	-0.0024	-0.0035	-0.0059	-0.0065	-0.0052	-0.0039
9	8	-0.0026	-0.0025	-0.0026	-0.0027	-0.0038	-0.0062	-0.0056	-0.0058	-0.0042
9	11.2	-0.0017	-0.0018	-0.0018	-0.0020	-0.0030	-0.0044	-0.0038	-0.0048	-0.0026
10	4	-0.0036	-0.0033	-0.0033	-0.0030	-0.0033	-0.0063	-0.0069	-0.0058	-0.0044
11	4	-0.0060	-0.0043	-0.0040	-0.0033	-0.0034	-0.0048	-0.0058	-0.0065	-0.0037
11	8	-0.0023	-0.0023	-0.0023	-0.0022	-0.0030	-0.0048	-0.0044	-0.0037	-0.0034
12	8	-0.0023	-0.0021	-0.0023	-0.0022	-0.0029	-0.0040	-0.0038	-0.0038	-0.0036
12	10.6	-0.0016	-0.0015	-0.0016	-0.0017	-0.0023	-0.0038	-0.0029	-0.0025	-0.0027
13	8	-0.0022	-0.0019	-0.0020	-0.0018	-0.0020	-0.0028	-0.0029	-0.0027	-0.0029

Force and Moment Summary

	h/De =	25.68	17.67	11.73	8.8	5.84	3.5	2.38	1.8	1.18
Balance	dL/T =	-0.381	-0.338	-0.331	-0.310	-0.374	-0.536	-0.627	-0.878	-1.491
Pressure	dL/T =	-0.433	-0.426	-0.430	-0.409	-0.483	-0.855	-0.796	-1.026	-1.656
Balance	dM/TDe=	0.007	0.007	-0.017	0.030	0.327	0.481	0.166	0.376	1.410
Pressure	dM/TDe=	0.330	0.322	0.320	0.387	0.765	1.004	0.637	0.787	1.803

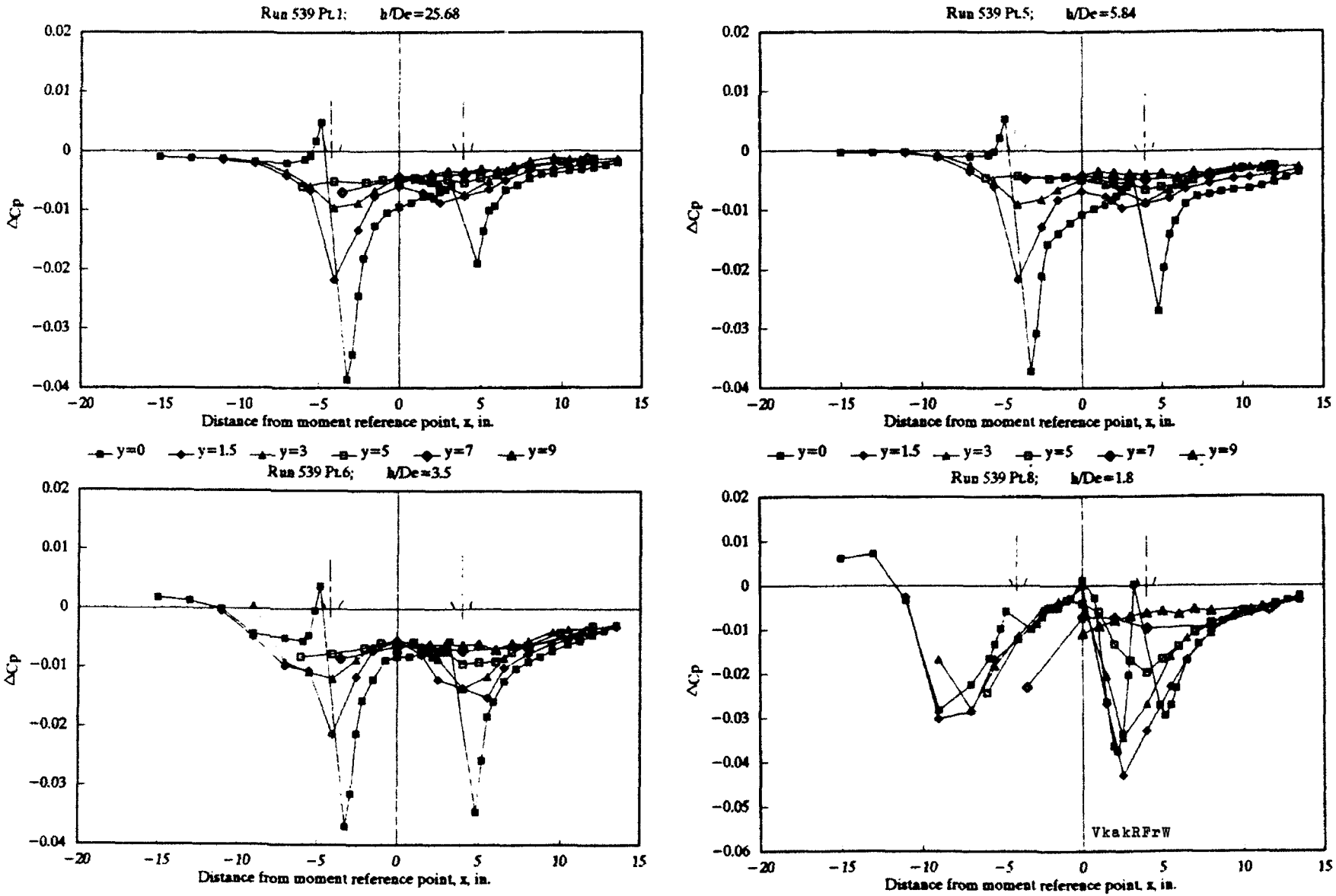

Fig.B-7 Chordwise distributions of jet induced pressure at selected heights - Configuration I - Both Jets
NPR=2 Run 539 Ve=.15

First page, underlined numbers, search on web

TABLE B-8 JET INDUCED PRESSURE INCREMENTS

Configuration I - Both Jets - NPR=4

Run 615 Ve=0

	Point	2	3	4	5	6	7	8
	h/De =	25.06	11.78	8.86	5.9	3.57	2.237	1.81
y	x	ΔCp	ΔCp	ΔCp	ΔCp	ΔCp	ΔCp	ΔCp
0	-15	-0.0001	-0.0003	-0.0005	-0.0009	-0.0013	-0.0013	-0.0004
0	-13	-0.0002	-0.0003	-0.0005	-0.0008	-0.0016	-0.0018	-0.0026
0	-11	-0.0000	-0.0001	-0.0003	-0.0008	-0.0017	-0.0023	-0.0053
0	-9	-0.0002	-0.0002	-0.0007	-0.0009	-0.0018	-0.0026	-0.0062
0	-7	-0.0001	-0.0001	-0.0001	-0.0001	-0.0001	-0.0002	-0.0004
0	-5.85	-0.0004	-0.0003	-0.0006	-0.0012	-0.0019	-0.0030	-0.0070
0	-5.8	-0.0001	-0.0003	-0.0006	-0.0014	-0.0019	-0.0030	-0.0067
0	-5.15	-0.0006	-0.0006	-0.0007	-0.0011	-0.0018	-0.0022	-0.0065
0	-4.8	-0.0004	-0.0006	0.0007	-0.0009	-0.0012	-0.0016	-0.0061
0	-3.2	-0.0012	-0.0010	-0.0010	-0.0015	-0.0026	-0.0028	-0.0077
0	-2.85	-0.0004	-0.0007	-0.0010	-0.0014	-0.0036	-0.0069	-0.0156
0	-2.5	-0.0005	-0.0003	-0.0010	-0.0016	-0.0042	-0.0108	-0.0252
0	-2.15	-0.0004	-0.0003	-0.0010	-0.0015	-0.0042	-0.0132	-0.0314
0	-1.5	-0.0001	-0.0004	-0.0009	-0.0021	-0.0038	-0.0110	-0.0272
0	-0.75	-0.0002	-0.0003	-0.0006	-0.0018	-0.0006	-0.0006	0.0006
0	0	0.0000	-0.0002	-0.0008	-0.0016	0.0023	0.0131	0.0247
0	0.75	0.0000	-0.0002	-0.0005	-0.0014	0.0039	0.0135	0.0029
0	1.5	0.0001	-0.0002	-0.0003	-0.0014	0.0018	-0.0080	-0.0332
0	1.95	-0.0001	-0.0002	-0.0005	-0.0012	-0.0004	-0.0116	-0.0356
0	2.15	-0.0001	-0.0002	-0.0004	-0.0010	-0.0019	-0.0203	-0.0431
0	2.5	-0.0002	-0.0002	-0.0004	-0.0008	-0.0028	-0.0181	-0.0361
0	2.85	-0.0002	-0.0004	-0.0006	-0.0008	-0.0017	-0.0100	-0.0219
0	3.2	-0.0006	-0.0005	-0.0004	-0.0005	0.0021	0.0037	-0.0056
0	4.8	-0.0007	-0.0008	-0.0009	-0.0029	-0.0095	-0.0051	-0.0052
0	5.15	-0.0007	0.0004	-0.0008	-0.0016	-0.0078	-0.0083	-0.0083
0	5.5	-0.0003	-0.0003	-0.0006	-0.0013	-0.0066	-0.0068	-0.0069
0	5.85	-0.0001	-0.0002	-0.0009	-0.0017	-0.0057	-0.0084	-0.0080
0	6.5	0.0001	-0.0001	-0.0005	-0.0014	-0.0040	-0.0084	-0.0080
0	7.25	0.0000	-0.0001	-0.0007	-0.0012	-0.0034	-0.0086	-0.0076
0	8	-0.0001	-0.0002	-0.0007	-0.0012	-0.0031	-0.0085	-0.0067
0	8.75	-0.0000	-0.0003	-0.0006	-0.0011	-0.0031	-0.0067	-0.0059
0	9.5	0.0000	-0.0003	-0.0005	-0.0010	-0.0030	-0.0047	-0.0053
0	10.5	-0.0001	-0.0003	-0.0006	-0.0007	-0.0026	-0.0027	-0.0052
0	11.25	-0.0002	-0.0004	-0.0005	-0.0008	-0.0020	-0.0018	-0.0052
0	12	0.0000	-0.0002	-0.0004	-0.0006	-0.0014	-0.0012	-0.0052
0	12.75	0.0001	-0.0002	-0.0004	-0.0005	-0.0011	-0.0009	-0.0053
0	13.5	0.0002	-0.0000	-0.0002	-0.0002	-0.0010	-0.0008	-0.0055
0.8	-4	-0.0011	-0.0011	-0.0022	-0.0050	-0.0060	-0.0039	-0.0083
0.8	4	-0.0006	-0.0006	-0.0020	-0.0043	-0.0283	-0.0136	-0.0083
1.5	-11	-0.0001	-0.0004	-0.0012	-0.0025	-0.0043	-0.0052	-0.0056
1.5	-9	-0.0002	-0.0004	-0.0007	-0.0015	-0.0023	-0.0034	-0.0065
1.5	-7	-0.0002	0.0004	-0.0011	-0.0013	-0.0026	-0.0044	-0.0081
1.5	-5.5	-0.0003	-0.0004	-0.0008	-0.0014	-0.0026	-0.0044	-0.0078
1.5	-4	-0.0006	-0.0004	-0.0010	-0.0020	-0.0031	-0.0032	-0.0069
1.5	-2.5	-0.0003	-0.0006	-0.0010	-0.0015	-0.0042	-0.0101	-0.0234
1.5	-1.5	-0.0002	-0.0003	-0.0006	-0.0016	-0.0040	-0.0110	-0.0269
1.5	0	-0.0003	-0.0005	-0.0007	-0.0017	0.0017	0.0129	0.0232
1.5	1.5	0.0150	0.0134	0.0124	0.0110	0.0102	0.0087	0.0091
1.5	2.5	-0.0000	-0.0000	0.0000	0.0001	-0.0001	-0.0000	-0.0000
1.5	4	-0.0000	-0.0001	-0.0000	0.0000	-0.0001	-0.0001	-0.0000
1.5	5.5	-0.0000	-0.0002	-0.0005	-0.0012	-0.0064	-0.0087	-0.0108
1.5	6.5	-0.0001	-0.0004	-0.0007	-0.0013	-0.0041	-0.0108	-0.0108
1.5	8	-0.0001	-0.0002	-0.0006	-0.0012	-0.0029	-0.0095	-0.0078
1.5	9.5	0.0000	-0.0002	-0.0005	-0.0009	-0.0029	-0.0065	-0.0059
1.5	10.5	-0.0001	-0.0003	-0.0005	-0.0008	-0.0024	-0.0033	-0.0053
1.5	12	-0.0001	-0.0003	-0.0006	-0.0006	-0.0016	-0.0015	-0.0045
1.5	13.5	0.0001	0.0001	0.0000	0.0001	-0.0000	0.0001	-0.0000
3	-9	-0.0002	-0.0004	-0.0009	-0.0025	-0.0070	-0.0095	-0.0104
3	-7	-0.0001	0.0003	-0.0012	-0.0027	-0.0071	-0.0085	-0.0083

	Point	2	3	4	5	6	7	8
	h/De =	25.06	11.78	8.86	5.9	3.57	2.237	1.81
y	x	ΔCp	ΔCp	ΔCp	ΔCp	ΔCp	ΔCp	ΔCp
3	-5.5	-0.0000	-0.0003	-0.0007	-0.0024	-0.0049	-0.0069	-0.0097
3	-4	-0.0002	-0.0002	-0.0008	-0.0019	-0.0034	-0.0049	-0.0141
3	-2.5	-0.0004	-0.0001	-0.0010	-0.0019	-0.0042	-0.0109	-0.0232
3	-1.5	-0.0001	-0.0003	-0.0007	-0.0016	-0.0037	-0.0112	-0.0256
3	0	-0.0002	-0.0003	-0.0005	-0.0016	0.0010	0.0077	0.0145
3	1.8	0.0001	-0.0002	-0.0001	-0.0012	-0.0006	-0.0063	-0.0306
3	2.5	-0.0001	-0.0002	-0.0006	-0.0007	-0.0057	-0.0226	-0.0388
3	4	-0.0001	-0.0004	-0.0005	-0.0009	-0.0069	-0.0189	-0.0178
3	5.5	-0.0001	-0.0003	-0.0006	-0.0012	-0.0067	-0.0114	-0.0202
3	6.5	0.0002	-0.0000	-0.0006	-0.0012	-0.0046	-0.0126	-0.0170
3	8	-0.0001	-0.0002	-0.0006	-0.0013	-0.0032	-0.0116	-0.0090
3	9.5	-0.0002	-0.0004	-0.0006	-0.0012	-0.0032	-0.0067	-0.0060
3	10.5	-0.0000	-0.0003	-0.0006	-0.0006	-0.0027	-0.0039	-0.0051
3	12	-0.0002	-0.0004	-0.0004	-0.0007	-0.0015	-0.0018	-0.0045
3	13.5	-0.0001	-0.0003	-0.0004	-0.0003	-0.0010	-0.0009	-0.0045
5	-6	-0.0002	-0.0004	-0.0007	-0.0019	-0.0037	-0.0053	-0.0109
5	-4	-0.0002	-0.0004	-0.0006	-0.0019	-0.0036	-0.0060	-0.0116
5	-2	-0.0002	-0.0004	-0.0006	-0.0018	-0.0044	-0.0086	-0.0191
5	-1	-0.0002	-0.0004	-0.0007	-0.0018	-0.0038	-0.0084	-0.0185
5	0	-0.0002	-0.0003	-0.0006	-0.0016	-0.0003	-0.0020	0.0039
5	1	-0.0002	-0.0005	-0.0006	-0.0014	-0.0002	0.0002	-0.0097
5	2	-0.0001	-0.0003	-0.0005	-0.0010	-0.0028	-0.0120	-0.0295
5	3	-0.0002	-0.0004	-0.0006	-0.0010	-0.0062	-0.0173	-0.0270
5	4	-0.0002	-0.0004	-0.0006	-0.0010	-0.0071	-0.0172	-0.0206
5	5	-0.0001	-0.0001	-0.0002	-0.0002	-0.0001	-0.0001	-0.0002
5	6	-0.0002	-0.0003	-0.0007	-0.0013	-0.0052	-0.0109	-0.0147
5	7	-0.0001	-0.0003	-0.0007	-0.0014	-0.0044	-0.0085	-0.0114
5	8	-0.0000	-0.0003	-0.0007	-0.0012	-0.0036	-0.0063	-0.0082
5	10	-0.0001	-0.0004	-0.0007	-0.0010	-0.0031	-0.0042	-0.0047
5	12	-0.0001	-0.0004	-0.0006	-0.0008	-0.0017	-0.0015	-0.0045
6.6	-3.5	-0.0002	-0.0004	-0.0006	-0.0017	-0.0034	-0.0052	-0.0081
7	0	-0.0002	-0.0004	-0.0005	-0.0015	-0.0012	-0.0042	0.0020
7	2	-0.0002	-0.0004	-0.0004	-0.0007	-0.0014	-0.0040	-0.0141
7	4	-0.0001	-0.0003	-0.0004	-0.0007	-0.0041	-0.0111	-0.0139
7	6	-0.0001	-0.0002	-0.0005	-0.0008	-0.0025	-0.0041	-0.0044
7	11.6	-0.0002	-0.0005	-0.0005	-0.0005	-0.0012	-0.0012	-0.0027
8.5	0	-0.0002	-0.0004	-0.0006	-0.0014	-0.0014	-0.0038	0.0017
9	1	-0.0000	0.0000	-0.0000	-0.0001	-0.0001	-0.0000	0.0000
9	2	-0.0002	-0.0005	-0.0005	-0.0008	-0.0010	-0.0008	-0.0031
9	3	-0.0001	-0.0003	-0.0003	-0.0006	-0.0014	-0.0038	-0.0070
9	4	-0.0002	-0.0004	-0.0004	-0.0006	-0.0023	-0.0056	-0.0078
9	5	-0.0002	-0.0004	-0.0005	-0.0008	-0.0026	-0.0052	-0.0083
9	6	-0.0001	-0.0002	-0.0004	-0.0008	-0.0024	-0.0048	-0.0051
9	7	-0.0001	-0.0003	-0.0005	-0.0008	-0.0022	-0.0038	-0.0039
9	8	-0.0000	-0.0002	-0.0004	-0.0008	-0.0017	-0.0026	-0.0027
9	11.2	-0.0002	-0.0005	-0.0005	-0.0008	-0.0008	-0.0009	-0.0019
10	4	-0.0002	-0.0005	-0.0005	-0.0007	-0.0017	-0.0038	-0.0060
11	4	-0.0003	-0.0005	-0.0006	-0.0007	-0.0013	-0.0019	-0.0027
11	8	-0.0002	-0.0004	-0.0005	-0.0008	-0.0011	-0.0015	-0.0018
12	8	-0.0008	-0.0005	-0.0004	-0.0004	-0.0007	-0.0006	-0.0008
12	10.6	-0.0002	-0.0005	-0.0003	-0.0003	-0.0005	-0.0004	-0.0007
13	8	-0.0003	-0.0007	-0.0005	-0.0008	-0.0009	-0.0009	-0.0006

Force and Moment Summary

	h/De =	25.06	11.78	8.85	5.9	3.57	2.237	1.81
Balance	dL/T =	-0.015	-0.035	-0.060	-0.121	-0.288	-0.550	-0.883
Pressure	dL/T =	-0.003	-0.022	-0.048	-0.101	-0.251	-0.486	-0.780
Balance	dM/TDe=	0.025	0.070	0.064	0.048	0.333	0.663	0.875
Pressure	dM/TDe=	0.003	0.051	0.043	0.018	0.245	0.624	0.757

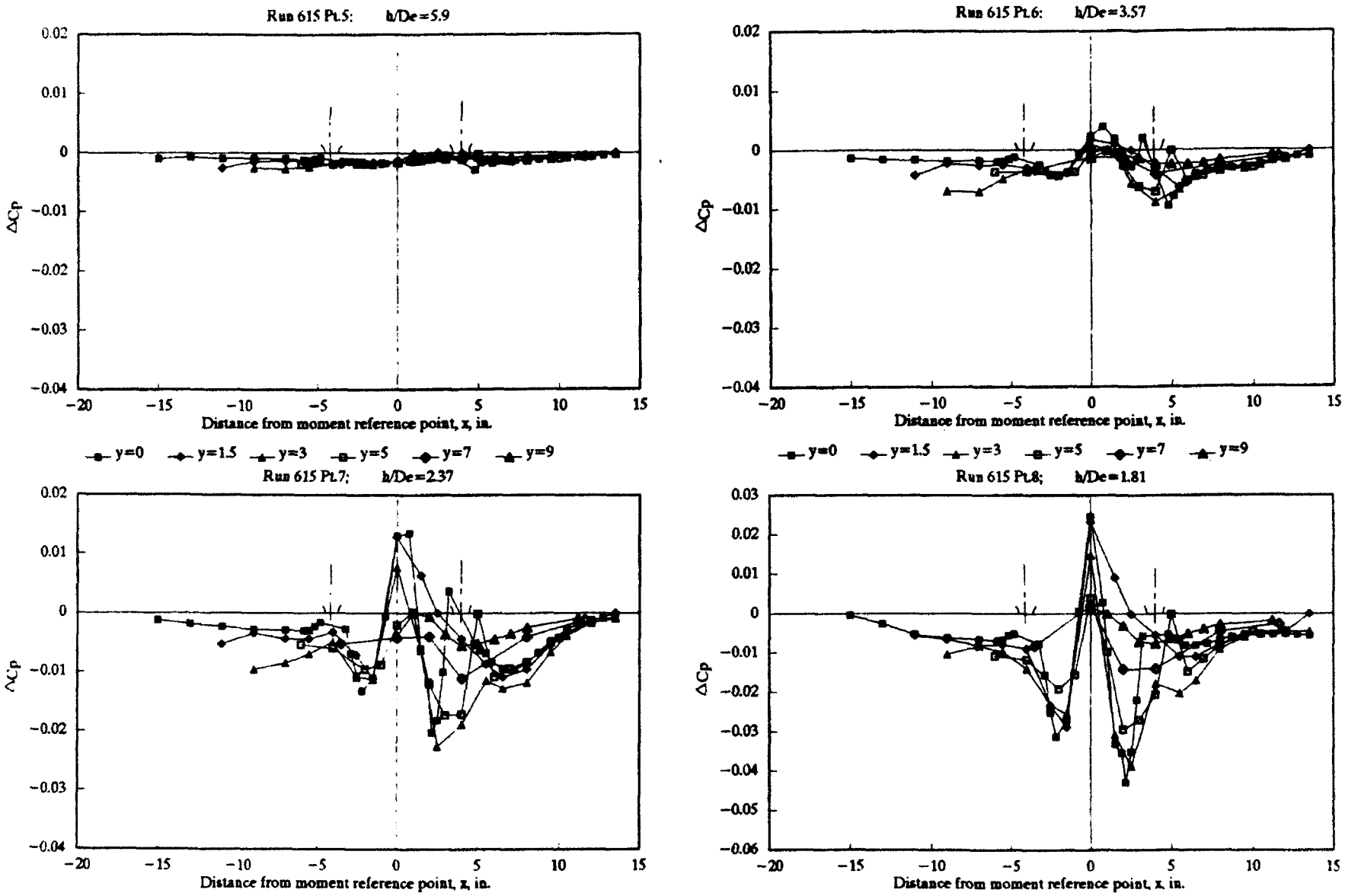

Fig.B-8 Chordwise distributions of jet induced pressure at selected heights - Configuration I - Both Jets
NPR=4 Run 615 Ve=0

TABLE B-9 JET INDUCED PRESSURE INCREMENTS

Configuration I - Both Jets - NPR=4

Run 616 Ve=.04

	Point	1	2	3	4	5	6	7
	h/De =	1.8	2.37	33.54	5.87	8.86	11.77	23.77
y	x	ΔCp	ΔCp	ΔCp	ΔCp	ΔCp	ΔCp	ΔCp
0	-15	-0.0015	-0.0026	-0.0035	-0.0027	-0.0013	-0.0008	-0.0003
0	-13	-0.0043	-0.0034	-0.0032	-0.0024	-0.0016	-0.0010	-0.0005
0	-11	-0.0074	-0.0044	-0.0030	-0.0021	-0.0015	-0.0012	-0.0007
0	-9	-0.0082	-0.0045	-0.0030	-0.0020	-0.0014	-0.0014	-0.0009
0	-7	-0.0007	-0.0004	-0.0003	-0.0003	-0.0002	-0.0002	-0.0002
0	-5.85	-0.0079	-0.0037	-0.0026	-0.0018	-0.0012	-0.0012	-0.0009
0	-5.5	-0.0079	-0.0036	-0.0026	-0.0017	-0.0016	-0.0012	-0.0011
0	-5.15	-0.0070	-0.0033	-0.0024	-0.0011	-0.0010	-0.0011	-0.0009
0	-4.8	-0.0068	-0.0027	-0.0019	-0.0010	-0.0009	-0.0009	-0.0009
0	-3.2	-0.0088	-0.0037	-0.0032	-0.0040	-0.0036	-0.0043	-0.0033
0	-2.85	-0.0154	-0.0068	-0.0035	-0.0025	-0.0027	-0.0026	-0.0022
0	-2.5	-0.0226	-0.0090	-0.0036	-0.0020	-0.0017	-0.0018	-0.0011
0	-2.15	-0.0262	-0.0102	-0.0035	-0.0015	-0.0011	-0.0015	-0.0008
0	-1.5	-0.0225	-0.0091	-0.0033	-0.0013	-0.0008	-0.0011	-0.0008
0	-0.75	-0.0011	-0.0004	-0.0017	-0.0012	-0.0008	-0.0007	-0.0008
0	0	0.0239	0.0121	0.0007	-0.0011	-0.0008	-0.0007	-0.0007
0	0.75	0.0029	0.0112	0.0012	-0.0012	-0.0009	-0.0008	-0.0005
0	1.5	-0.0350	-0.0068	-0.0009	-0.0012	-0.0008	-0.0010	-0.0008
0	1.95	-0.0373	-0.0139	-0.0010	-0.0012	-0.0010	-0.0011	-0.0008
0	2.15	-0.0471	-0.0214	-0.0017	-0.0014	-0.0012	-0.0014	-0.0010
0	2.5	-0.0392	-0.0194	-0.0013	-0.0012	-0.0010	-0.0012	-0.0007
0	2.85	-0.0238	-0.0108	0.0001	-0.0015	-0.0010	-0.0014	-0.0013
0	3.2	-0.0065	0.0032	0.0037	-0.0018	-0.0013	-0.0018	-0.0008
0	4.8	-0.0075	-0.0088	-0.0113	-0.0020	-0.0021	-0.0026	-0.0016
0	5.15	-0.0086	-0.0101	-0.0078	-0.0013	-0.0016	-0.0014	-0.0008
0	5.5	-0.0114	-0.0107	-0.0056	-0.0008	-0.0008	-0.0006	-0.0004
0	5.85	-0.0135	-0.0119	-0.0058	-0.0009	-0.0002	-0.0002	-0.0005
0	6.5	-0.0129	-0.0117	-0.0043	-0.0008	-0.0005	-0.0005	-0.0002
0	7.25	-0.0118	-0.0118	-0.0037	-0.0008	-0.0006	-0.0004	-0.0002
0	8	-0.0080	-0.0102	-0.0029	-0.0008	-0.0004	-0.0004	-0.0002
0	8.75	-0.0070	-0.0078	-0.0022	-0.0008	-0.0004	-0.0003	-0.0002
0	9.5	-0.0058	-0.0054	-0.0018	-0.0007	-0.0004	-0.0002	-0.0001
0	10.5	-0.0047	-0.0029	-0.0014	-0.0006	-0.0003	-0.0002	-0.0001
0	11.25	-0.0043	-0.0017	-0.0011	-0.0005	-0.0003	-0.0003	-0.0001
0	12	-0.0040	-0.0011	-0.0009	-0.0005	-0.0001	-0.0001	-0.0001
0	12.75	-0.0036	-0.0009	-0.0007	-0.0005	-0.0003	-0.0001	-0.0001
0	13.5	-0.0035	-0.0006	-0.0005	-0.0003	-0.0002	-0.0001	-0.0001
0.8	-4	-0.0097	-0.0050	-0.0078	-0.0072	-0.0064	-0.0060	-0.0058
0.8	4	-0.0103	-0.0200	-0.0382	-0.0032	-0.0049	-0.0046	-0.0035
1.5	-11	-0.0063	-0.0063	-0.0055	-0.0038	-0.0017	-0.0013	-0.0008
1.5	-9	-0.0080	-0.0061	-0.0038	-0.0020	-0.0013	-0.0013	-0.0008
1.5	-7	-0.0082	-0.0064	-0.0038	-0.0019	-0.0015	-0.0014	-0.0011
1.5	-5.5	-0.0080	-0.0046	-0.0032	-0.0019	-0.0014	-0.0016	-0.0012
1.5	-4	-0.0084	-0.0037	-0.0040	-0.0028	-0.0023	-0.0030	-0.0021
1.5	-2.5	-0.0192	-0.0081	-0.0032	-0.0014	-0.0015	-0.0015	-0.0008
1.5	-1.5	-0.0226	-0.0086	-0.0033	-0.0014	-0.0007	-0.0011	-0.0008
1.5	0	0.0207	0.0105	-0.0003	-0.0014	-0.0009	-0.0009	-0.0007
1.5	1.5	0.0094	0.0084	0.0084	0.0093	0.0090	0.0092	0.0093
1.5	2.5	-0.0003	-0.0003	-0.0004	-0.0003	-0.0003	-0.0002	-0.0002
1.5	4	-0.0005	-0.0004	-0.0004	-0.0003	-0.0003	-0.0002	-0.0002
1.5	5.5	-0.0175	-0.0118	-0.0063	-0.0007	-0.0008	-0.0004	-0.0003
1.5	6.5	-0.0174	-0.0113	-0.0047	-0.0007	-0.0006	-0.0003	-0.0002
1.5	8	-0.0101	-0.0108	-0.0031	-0.0007	-0.0004	-0.0002	-0.0001
1.5	9.5	-0.0058	-0.0067	-0.0019	-0.0008	-0.0003	-0.0002	-0.0001
1.5	10.5	-0.0046	-0.0029	-0.0014	-0.0005	-0.0003	-0.0002	-0.0001
1.5	12	-0.0037	-0.0010	-0.0009	-0.0005	-0.0003	-0.0002	-0.0001
1.5	13.5	-0.0004	-0.0003	-0.0003	-0.0002	-0.0003	-0.0001	-0.0001
3	-9	-0.0118	-0.0068	-0.0060	-0.0037	-0.0031	-0.0026	-0.0012
3	-7	-0.0069	-0.0074	-0.0056	-0.0035	-0.0024	-0.0016	-0.0011

	Point	1	2	3	4	5	6	7
	h/De =	1.8	2.37	33.54	5.87	8.86	11.77	23.77
y	x	ΔCp	ΔCp	ΔCp	ΔCp	ΔCp	ΔCp	ΔCp
3	-5.5	-0.0088	-0.0057	-0.0044	-0.0025	-0.0018	-0.0011	-0.0008
3	-4	-0.0101	-0.0049	-0.0041	-0.0022	-0.0008	-0.0012	-0.0008
3	-2.5	-0.0163	-0.0077	-0.0032	-0.0019	-0.0008	-0.0010	-0.0007
3	-1.5	-0.0210	-0.0086	-0.0038	-0.0017	-0.0009	-0.0008	-0.0006
3	0	0.0097	0.0037	-0.0013	-0.0016	-0.0011	-0.0007	-0.0006
3	1.5	-0.0328	-0.0088	-0.0010	-0.0014	-0.0009	-0.0007	-0.0007
3	2.5	-0.0413	-0.0248	-0.0058	-0.0012	-0.0004	-0.0009	-0.0005
3	4	-0.0207	-0.0204	-0.0084	-0.0016	-0.0011	-0.0006	-0.0008
3	5.5	-0.0246	-0.0110	-0.0064	-0.0018	-0.0007	-0.0005	-0.0004
3	6.5	-0.0225	-0.0116	-0.0047	-0.0009	-0.0006	-0.0003	-0.0002
3	8	-0.0117	-0.0120	-0.0030	-0.0008	-0.0006	-0.0000	-0.0002
3	9.5	-0.0058	-0.0070	-0.0020	-0.0005	-0.0003	-0.0001	-0.0001
3	10.5	-0.0043	-0.0035	-0.0015	-0.0008	-0.0004	-0.0002	-0.0001
3	12	-0.0033	-0.0013	-0.0010	-0.0006	-0.0003	-0.0002	-0.0001
3	13.5	-0.0031	-0.0007	-0.0006	-0.0004	-0.0003	-0.0001	-0.0001
5	-6	-0.0107	-0.0049	-0.0036	-0.0025	-0.0024	-0.0028	-0.0016
5	-4	-0.0094	-0.0047	-0.0033	-0.0024	-0.0029	-0.0035	-0.0018
5	-2	-0.0134	-0.0067	-0.0035	-0.0023	-0.0015	-0.0019	-0.0009
5	-1	-0.0131	-0.0066	-0.0030	-0.0019	-0.0018	-0.0014	-0.0008
5	0	-0.0013	-0.0046	-0.0023	-0.0019	-0.0014	-0.0012	-0.0006
5	1	-0.0071	-0.0026	-0.0017	-0.0019	-0.0014	-0.0009	-0.0005
5	2	-0.0277	-0.0106	-0.0030	-0.0021	-0.0015	-0.0013	-0.0009
5	3	-0.0279	-0.0166	-0.0048	-0.0017	-0.0014	-0.0009	-0.0009
5	4	-0.0224	-0.0160	-0.0056	0.0005	-0.0012	-0.0009	-0.0008
5	5	-0.0008	-0.0005	-0.0005	-0.0005	-0.0005	-0.0004	-0.0003
5	6	-0.0140	-0.0089	-0.0045	-0.0010	-0.0009	-0.0005	-0.0003
5	7	-0.0117	-0.0074	-0.0036	-0.0015	-0.0009	-0.0008	-0.0004
5	8	-0.0084	-0.0063	-0.0029	-0.0011	-0.0010	-0.0007	-0.0005
5	10	-0.0045	-0.0036	-0.0018	-0.0010	-0.0008	-0.0008	-0.0004
5	12	-0.0031	-0.0016	-0.0010	-0.0008	-0.0006	-0.0004	-0.0002
6.6	-3.5	-0.0096	-0.0043	-0.0030	-0.0020	-0.0019	-0.0023	-0.0015
7	0	-0.0012	-0.0040	-0.0027	-0.0014	-0.0014	-0.0020	-0.0015
7	2	-0.0092	-0.0038	-0.0018	-0.0013	-0.0012	-0.0016	-0.0010
7	4	-0.0148	-0.0080	-0.0030	-0.0014	-0.0012	-0.0011	-0.0006
7	8	-0.0048	-0.0036	-0.0019	-0.0007	-0.0008	-0.0006	-0.0001
7	11.8	-0.0028	-0.0013	-0.0008	-0.0004	-0.0005	-0.0003	-0.0000
8.5	0	-0.0007	-0.0040	-0.0026	-0.0014	-0.0012	-0.0013	-0.0011
9	1	-0.0005	-0.0003	-0.0002	-0.0004	-0.0002	-0.0002	-0.0002
9	2	-0.0003	-0.0012	-0.0022	-0.0013	-0.0010	-0.0012	-0.0009
9	3	-0.0054	-0.0026	-0.0018	-0.0012	-0.0008	-0.0010	-0.0008
9	4	-0.0075	-0.0042	-0.0019	-0.0013	-0.0008	-0.0010	-0.0009
9	5	-0.0089	-0.0047	-0.0022	-0.0014	-0.0009	-0.0011	-0.0010
9	6	-0.0080	-0.0043	-0.0020	-0.0011	-0.0008	-0.0009	-0.0007
9	7	-0.0049	-0.0038	-0.0020	-0.0010	-0.0009	-0.0010	-0.0007
9	8	-0.0038	-0.0030	-0.0015	-0.0009	-0.0007	-0.0007	-0.0004
9	11.2	-0.0023	-0.0014	-0.0009	-0.0000	-0.0007	-0.0007	-0.0003
10	4	-0.0045	-0.0025	-0.0019	-0.0015	-0.0010	-0.0011	-0.0009
11	4	-0.0021	-0.0018	-0.0022	-0.0014	-0.0009	-0.0009	-0.0008
11	9	-0.0021	-0.0020	-0.0012	-0.0011	-0.0008	-0.0012	-0.0008
12	8	-0.0009	-0.0012	-0.0009	-0.0010	-0.0008	-0.0005	-0.0004
12	10.8	-0.0006	-0.0009	-0.0008	-0.0008	-0.0008	-0.0008	-0.0004
13	8	-0.0008	-0.0011	-0.0014	-0.0012	-0.0007	-0.0008	-0.0006

Force and Moment Summary

	h/De =	1.8	2.37	33.54	5.87	8.86	11.77	23.77
Balance	dL/T =	-0.906	-0.574	-0.294	-0.139	-0.103	-0.096	-0.062
Pressure	dL/T =	-0.793	-0.487	-0.255	-0.131	-0.099	-0.094	-0.057
Balance	dM/TDe =	0.788	0.583	0.045	-0.001	-0.129	-0.109	-0.091
Pressure	dM/TDe =	0.779	0.584	0.106	-0.044	-0.009	-0.026	-0.019